HYQUIP

+44 (0)1204 699959
enquiries@hyquip.co.uk
hyquip.co.uk

HYDAC INTERNATIONAL

HYDAC Variable Displacement Pumps for Closed Circuits

PPV200

EN 2.915.0/11.17

+44 (0)1204 699959
enquiries@hyquip.co.uk
hyquip.co.uk

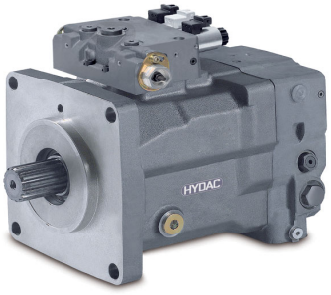

VARIABLE DISPLACEMENT PUMPS FOR CLOSED CIRCUITS
PPV200

Ordering Code	1.1	PPV200	4
Technical Information	2.1	Specifications	8
	2.2	Max. drive torques	9
	2.3	Max. through drive torques	12
	2.4	Seals	13
	2.5	Filtration	13
	2.6	Hydraulic fluids	13
	2.7	Temperature range	13
	2.8	Viscosity range	13
	2.9	Installation instructions	14
	2.10	Piping example	15
Control options	3.1	Overview	16
	3.2	Accuracy and V_{max}-limitation	17
	3.3	Maximum pressure control MDR	17
	3.4	Mechanical-hydraulic M1R and M2E	18
	3.5	Hydraulic H1 and H1P	21
	3.6	Mechanical-hydraulic CA and CAF	25
	3.7	Electro-hydraulic E1	26
	3.8	Electro-hydraulic E1P	28
	3.9	Electro-hydraulic E2	30
	3.10	Electro-hydraulic 3-point-control E5	32
Charge pump	4.1	Technical specifications	33
	4.2	Through drive flange on PGI	35
Dimensions	5.1	PPV200 with Mx-control	36
	5.2	PPV200 with Hx-control	38
	5.3	PPV200 with CA-control	40
	5.4	PPV200 with Ex-control	42
	5.5	Modular system	44
	5.6	Single pump PPV200	46
	5.7	Suction and pressure port	47
	5.8	Tandem pumps PPV200	48

Knowledge is POWER – Motion Force Control is our Business
HYQUIP Limited New Brunswick Street Horwich Bolton Lancashire BL6 7JB UK

ORDERING CODE

1.1 PPV200

PPV200 - 075 R - E1P1 000 B H1 ... >>

Type

PPV200
adjustable axial piston pump for closed circuits

Size

Sizes								
055	075	105	135	165	210	280		
●							055	55 cm³/rev.
	●						075	75 cm³/rev.
		●					105	105 cm³/rev.
			●				135	135 cm³/rev.
				●			165	165 cm³/rev.
					●		210	210 cm³/rev.
						●	280	280 cm³/rev.

Direction of rotation

●	●	●	●	●	●	●	R	clockwise rotation
●	●	●	●	●	●	●	L	anti-clockwise rotation

Control options

●	●	●	●	●	●	●	M1R0	M1R mechanically proportional with zero-position notch
●	●	●	●	●	●	●	M2E0	M2E mechanically proportional with electrical release
●	●	●	●	●	●	●	H100	H1 hydraulically proportional
●	●	●	●	●	●	●	H1P0	H1P hydraulically proportional / maximum pressure control (*p)
●	●	●	●	●	●	●	E101	E1 electrically proportional
●	●	●	●	●	●	●	E1P1	E1P electrically proportional / maximum pressure control (*p)
●	●	●	●	●	●	●	E200	E2 electrically proportional / electrical release / switchable control circuit panel (for combinations with displacement motor)
●	●	●	●	●	●	●	E500	E5 electrically switchable, 3 positions
▲	▲	▲	▲				CA00	CA speed-dependent mechanical control (*c)/(*p)/(*r)
				▲	▲	▲	CAF0	CAF speed-dependent mechanical control (*c)/(*p)/(*r)

Additional controller features

●	●	●	●	●	●		M05	M1 control lever position 24°(*a)
●	●	●	●	●	●		M11	M1 control lever position 90°(standard for M1) (*a)
●	●	●	●	●	●		M15	M1 control lever position 133° (*a)
●	●	●	●	●	●		M16	M1 control lever position 144° (*a)
●	●	●	●	●	●		M20	M1 control lever position 188° (*a)
●	●	●	●	●	●		M22	M1 control lever position 210° (*a)
●	●	●	●	●	●		M24	M1 control lever position 232° (*a)
●	●	●	●	●	●	●	M2E	M2E control lever position 275° (standard for M2E) (*a)
●	●	●	●	●	●	●	000	not applicable (H1; H1P; E1; E1P; E5; CA; CAF)

Pilot pressure range

●	●	●	●	●	●	●	A	4 – 10 bar
●	●	●	●	●	●	●	B	4 – 16 bar (standard) (not for E5)
●	●	●	●	●	●	●	0	not applicable (M1R0, CA00, CAF0)

Connector type

●	●	●	●	●	●	●	A1	AMP / 12 V (E1; E1P; E2; CA)
●	●	●	●	●	●	●	A2	AMP / 24 V (E1; E1P; E2; CA)
●	●	●	●	●	●	●	H1	DIN / 12 V (E1; E1P; E2; CA)
●	●	●	●	●	●	●	H2	DIN / 24 V (E1; E1P; E2; CA)
●	●	●	●	●	●	●	D1	Deutsch / 12 V (E1; E1P; E2; CA)
●	●	●	●	●	●	●	D2	Deutsch / 24 V (E1; E1P; E2; CA)
●	●	●	●	●	●	●	00	not applicable (H1; H1P; M1R)

>>

Knowledge is POWER – Motion Force Control is our Business
HYQUIP Limited New Brunswick Street Horwich Bolton Lancashire BL6 7JB UK

... 99 - 305 19 E 0 - M S0 ... >>

Sizes								
	055	075	105	135	165	210	280	
Response orifices								
06	●	●	●	●	●	●	●	0.6 mm
07	●	●	●	●	●	●	●	0.7 mm
08	●	●	●	●	●	●	●	0.8 mm
09	●	●	●	●	●	●	●	0.9 mm
10	●	●	●	●	●	●	●	1.0 mm
11	●	●	●	●	●	●	●	1.1 mm
12	●	●	●	●	●	●	●	1.2 mm
13	●	●	●	●	●	●	●	1.3 mm
14	●	●	●	●	●	●	●	1.4 mm
15	●	●	●	●	●	●	●	1.5 mm
18	●	●	●	●	●	●	●	1.8 mm
21	●	●	●	●	●	●	●	2.1 mm
99	●	●	●	●	●	●	●	without response orifices (standard for E1, E1P and E2)
System relief valve (for the primary protection of the work circle)								
150	●	●	●	●	●	●	●	150 bar
200	●	●	●	●	●	●	●	200 bar
250	●	●	●	●	●	●	●	250 bar
300	●	●	●	●	●	●	●	300 bar
350	●	●	●	●	●	●	●	350 bar
380	●	●	●	●	●	●	●	380 bar
420	●	●	●	●	●	●	●	420 bar
435	●	●	●	●	●	●	●	435 bar
445	●	●	●	●	●	●	●	445 bar
Charge relief valve								
17	▲	▲	▲	▲	▲	▲	▲	17.5 bar (only CA control; CA standard, see "Control options")
19	●	●	●					19 bar
20				●	●	●	●	20 bar
22	●	●	●					22.5 bar
23				●	●	●	●	23 bar
24	●	●	●					24 bar
00	●	●	●	●	●	●	●	Flushing orifice
Filter configuration								
F	●	●	●	●	●	●	●	Filter flange with filter cartridge
E	●	●	●	●	●	●	●	Straight charge flange 90°
D	●	●	●	●				Straight charge flange
Swash angle sensor								
S		●	●	●	●	●	●	with swash angle sensor (*m)
0	●	●	●	●	●	●	●	without swash angle sensor
Porting								
M	●	●	●	●	●	●	●	Metric ISO 6149
D	●	●	●	●				DIN 3852
Mounting flange								
S0	●	●	●	●		●	●	SAE J744 standard (size 135: (d*))
S1		●	●	●				SAE J744 / Additional thread (sizes 105; 135: (*u))
S2				●	●			SAE J744 / Additional drill holes (sizes 135; 165: (*u)) / size 135 (*d))

>>

Knowledge is POWER – Motion Force Control is our Business
HYQUIP Limited New Brunswick Street Horwich Bolton Lancashire BL6 7JB UK

... S32 - GP0 A22 - ... >>

055	075	105	135	165	210	280		
							Drive shaft	
●	●	●					S32	Splined shaft ANSI B92.1 12/24- 14 spline (SAE C) / (size 105: (*w))
		●	●				S38	Splined shaft ANSI B92.1 12/24- 17 spline (SAE C-C)
			●	●			S44	Splined shaft ANSI B92.1 8/16-13 spline (SAE D&E)
					●	●	S50	Splined shaft ANSI B92.1 8/16-15 spline (SAE J744 F) / (sizes 210; 280: (*t))
●	●						T21	Splined shaft ANSI B92.1 16/32-21 spline (*t)
		●					T23	Splined shaft ANSI B92.1 16/32-23 spline (*t)
			●	●	●		T27	Splined shaft ANSI B92.1 16/32-27 spline (*t)
						●	T33	Splined shaft ANSI B92.1 16/32-33 spline (*t)
●	●	●	●	●	●	●	F40	Shaft flange (*f)
	○						W35	Splined shaft DIN 5480 W35x2x30x16x9g
			○				W40	Splined shaft DIN 5480 W40x2x30x18x9g
			○				W45	Splined shaft DIN 5480 W45x2x30x21x9g
					○		W50	Splined shaft DIN 5480 W50x2x30x24x9g
							Through drive options	
●	●	●	●	●	●	●	A00	SAE J744 A without coupling (standard)
●	●	●	●				A09	SAE J744 A / ANSI B92.1 16/32 – 9 teeth (A)
●	●						A11	SAE J744 A / ANSI B92.1 16/32 – 11 teeth
			●	●			A13	SAE J744 A / ANSI B92.1 16/32 – 13 teeth
●	●	●	●	●	●	●	B00	SAE J744 B without coupling
●	●	●	●	●	●	●	B13	SAE J744 B / ANSI B92.1 16/32 – 13 teeth (B)
●	●	●	●		●	●	B15	SAE J744 B / ANSI B92.1 16/32 – 15 teeth (B-B)
●	●	●	●	●	●	●	C00	SAE J744 C without coupling
●	●	●	●	●	●	●	C14	SAE J744 C / ANSI B92.1 12/24 – 14 teeth (C)
●	●	●	●				C21	SAE J744 C / ANSI B92.1 16/32 – 21 teeth
		●	●		●		C23	SAE J744 C / ANSI B92.1 16/32 – 23 teeth
			●	●	●	●	D00	SAE J744 D without coupling
					●		D13	SAE J744 D / ANSI B92.1 8/16 – 13 teeth (D)
			●				D17	SAE J744 D / ANSI B92.1 12/24 – 17 teeth
			●	●	●	●	D27	SAE J744 D / ANSI B92.1 16/32 – 27 teeth
					●		E00	SAE J744 E without coupling
					●	●	E27	SAE J744 E / ANSI B92.1 16/32 – 27 teeth
						●	E33	SAE J744 E / ANSI B92.1 16/32 – 33 teeth
●	●	●	●	●	●	●	GP0	for the attachment of gear pumps preferred sizes
							Through drive attachments	
●	●	●	●				A16	Internal gear pump 16 cm3/U (preferred size gear pump)
●	●	●	●	○			A22	Internal gear pump 22.5 cm³/rev. (preferred size gear pump)
●	●	●	●				B32	Internal gear pump 16 + 16 cm3/rev. (preferred size gear pump)
●	●	●	●				B38	Internal gear pump tandem 16+22.5 cm³/rev. (preferred size gear pump)
●	●	●	●				C38	Internal gear pump tandem 22.5+16 cm³/rev. (preferred size gear pump)
●	●	●	●		●	●	C45	Internal gear pump tandem 22.5+22.5 cm³/rev. (preferred size gear pump)
●		●			●		G31	External gear pump 31 cm³/rev. (preferred size gear pump) (*r)
	●	●		●	●	●	G38	External gear pump 38 cm³/rev. (preferred size gear pump)
				●	●	●	G44	External gear pump 44 cm³/rev. (preferred size gear pump) (*r)
●	●	●	●	●	●	●	T05	PPV 200-55 through drive preparation (*s)
	●	●	●	●	●	●	T07	PPV 200-75 through drive preparation (*s)
		●	●	●	●	●	T10	PPV 200-105 through drive preparation (*s)
			●	●	●	●	T13	PPV 200-135 through drive preparation (*s)
				●	●		T16	PPV 200-165 through drive preparation (*s)
					●	●	T21	PPV 200-210 through drive preparation (*s)
						●	T28	PPV 200-280 through drive preparation (*s)
●	●	●	●	●	●	●	000	without through drive attachment parts

>>

Knowledge is POWER – Motion Force Control is our Business
HYQUIP Limited New Brunswick Street Horwich Bolton Lancashire BL6 7JB UK

... E B13 - V03 - 063 / 063 - N

Sizes	055	075	105	135	165	210	280		
Gear pump supply (charge pump)									
	●	●	●	●	●	●	●	E	external supply
	●	●	●	●	●	●	●	0	without gear pump
Through drive options charge pump									
	●	●	●	●	○			A09	SAE J744 A / ANSI B92.1 16/32 – 9 teeth (A) (Standard)
	●	●	●	●				B00	SAE J744 B without coupling
	●	●	●	●				B13	SAE J744 B / ANSI B92.1 16/32 – 13 teeth (B)
	●	●	●	●				B15	SAE J744 B / ANSI B92.1 16/32 – 15 teeth (B-B)
	●	●	●	●				C00	SAE J744 C without coupling
	●	●	●	●				C14	SAE J744 C / ANSI B92.1 12/24 – 14 teeth (C)
	●	●	●	●	●	●	●	000	without through drive options charge pump
Surface protection / paint									
	●	●	●	●	●	●	●	R00	Rust protection oil (standard)
	●	●	●	●	●	●	●	P01	primed, RAL 3009 (red)
	●	●	●	●	●	●	●	P03	primed, blue
	●	●	●	●	●	●	●	P06	primed, grey (RAL 7043)
	●	●	●	●	●	●	●	V03	primed + painted RAL 9005 (black)
	●	●	●	●	●	●	●	V25	primed + painted RAL 7015 (grey)
Max. displacement setting (P)									
	●							XXX	028 – 045 cm³/rev. (numerical 3-digit)
	●							XXX	046 – 055 cm³/rev. (numerical 3-digit)
		●						XXX	055 – 065 cm³/rev. (numerical 3-digit)
		●						XXX	066 – 075 cm³/rev. (numerical 3-digit)
			●					XXX	075 – 090 cm³/rev. (numerical 3-digit)
			●					XXX	091 – 105 cm³/rev. (numerical 3-digit)
				●				XXX	105 – 120 cm³/rev. (numerical 3-digit)
				●				XXX	121 – 135 cm³/rev. (numerical 3-digit)
					●			XXX	135 – 150 cm³/rev. (numerical 3-digit)
					●			XXX	151 – 165 cm³/rev. (numerical 3-digit)
						●		XXX	166 – 190 cm³/rev. (numerical 3-digit)
						●		XXX	191 – 210 cm³/rev. (numerical 3-digit)
							●	XXX	210 – 280 cm³/rev. (numerical 3-digit)
Max. displacement setting (S)									
	●	●	●	●	●	●	●	XXX	numerical 3-digit, setting ranges see "max. displacement setting (P)"
Special requirements									
	●	●	●	●	●	●	●	N	no special requirements (standard)
	▲	▲	▲	▲	▲	▲	▲	C	Special requirements (additional long text required)

(*a) see mechanical hydraulic M1R and M2E / adjustment range
(*c) selection C required for "special requirements"
(*d) only with DIN connections (see "Porting")
(*f) based on connection flange SAE J1946 Type A – 120 x 8 x 10
(*m) only metrical ISO connections (see "Porting")
(*p) pressure limitation valve setting p ≥ 250 bar (see "System relief valve")
(*r) only clockwise rotation (see "Direction of rotation")
(*s) secondary pump PPV200 must be specified separately
(*t) recommended for use PPV200 as secondary pump (see "Through drive attachments")
(*u) required for through drivers greater / equal SAE C (see "Through drive attachments")
(*w) not for tandem units (see "Through drive attachments")

● available option
preferred option
○ option on request
▲ separate specification required

Knowledge is POWER – Motion Force Control is our Business
HYQUIP Limited New Brunswick Street Horwich Bolton Lancashire BL6 7JB UK

TECHNICAL INFORMATION

2.1 Specifications

Pump size			55	75	105	135	165	210	280
Geometric displacement		[cm³/rev]	54.7	75.9	105	135.6	165.6	210.1	281.9
Pressure	Nominal pressure	[bar]	450						
	Peak pressure (short-term t < 10s)		500						
	Perm. housing pressure		2.5						
	Charge pressure		19 – 35						
	Min. pressure (high-pressure side)		20						
	Min. pressure (Low-pressure side)		10						
	Min. suction pressure (absolute)		0.8						
	Rate of pressure rise	[bar/s]	10.000						
Drive speed	Min.	[rpm]	500						
	Max. (at 100 % ED V_{max})		3.900	3.400	3.200	3.000	2.750	2.300	2.400
	Max. (short-time < 10 sec. at V_{max})		4.150	3.600	3.400	3.200	2.950	2.500	2.550
Drive power	Switching capacity (at 100% V_{max} max. operation speed, nominal pressure and 20 bar specific performance pressure)	[kW]	153	185	241	292	326	346	485
Drive torque	Max. drive torque (under nominal pressure)	[Nm]	374	519	719	928	1.133	1.438	1.929
Max. permitted oil temperature measured at drain port of pump (with permissible kinematic viscosity > 10 cST)		[°C]	90						
Filling volume		[dm³]	2.1	2.8	3.4	3.8	4.2	4.8	5.5
Approx. weight (without oil, with H1 adjustment)		[kg]	46	49	66	72	113	132	164
Moment of inertia		[kgm²]	0.0054	0.0084	0.0149	0.022	0.0311	0.0477	0.0938
Permissible radial force on drive shaft		[N]	on request						
Permissible axial force on drive shaft		[N]	2.000, higher values on request						

Recommended operating range, PPV200

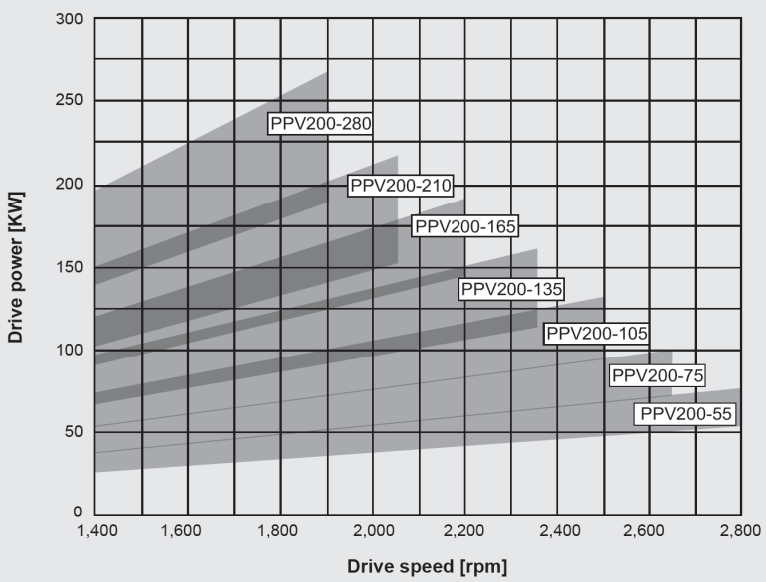

Knowledge is POWER – Motion Force Control is our Business
HYQUIP Limited New Brunswick Street Horwich Bolton Lancashire BL6 7JB UK

2.2 Max. drive torques

Pump size		55		75	
SAE J744 mounting flange	Flange	SAE C, 2-hole		SAE C, 2-hole	SAE C 2-hole (with 4 additional M12 threads)
	G [mm]	-		-	114
	H [mm]	-		-	
	J [mm]	17.5		17.5	
	K [mm]	181		181	
	D [mm]	31		31	
	N [mm]	127		127	
	V [mm]	-		-	
	d [mm]	-		-	
Drive shaft	Shaft spline according to ANSI B92.1	SAE C 12/24, 14 Z	16/32, 21 Z	SAE C 12/24, 14 Z	16/32, 21 Z
	max. permissible torque [Nm]	676	1067	676	1067
	Diameter [mm]	31.22	34.51	31.22	34.51
	Usable spline length [mm]	30	39.5	30	39.5
	Shaft type	with undercut	without undercut	with undercut	without undercut
	Excess length [mm]	56	54	56	55

Pump size		105			135		
SAE J744 mounting flange	Flange	SAE C, 2-hole		SAE C 2-hole (with 4 additional M12 threads)	SAE D 2-hole	SAE D 2-hole (with 4 additional M16 threads)	SAE D 2-hole (with additional bores d= 17.5 mm)
	G [mm]	-		114	-	138	-
	H [mm]	-			-		230
	J [mm]	17.5			20.6		
	K [mm]	181			228.6		
	D [mm]	31			40		
	N [mm]	127			152.4		
	V [mm]	-			-	-	190
	d [mm]	-			-		
Drive shaft	Shaft spline according to ANSI B92.1	SAE C 12/24, 14 Z	SAE C-C 12/24, 17 Z	16/32, 23 Z	SAE C-C 12/24, 17 Z	16/32, 27 Z	SAE D, E 8/16, 13 Z
	max. permissible torque [Nm]	676	1287	1431	1287	2390	1802
	Diameter [mm]	31.22	37.68	37.68	37.68	44.05	43.71
	Usable spline length [mm]	30	30	38.5	30	62	50
	Shaft type	with undercut	with undercut	without undercut	with undercut	without undercut	with undercut
	Excess length [mm]	56	62	55	62	75	75

Knowledge is POWER – Motion Force Control is our Business
HYQUIP Limited New Brunswick Street Horwich Bolton Lancashire BL6 7JB UK

Pump size		165		210		280	
SAE J744 mounting flange	Flange	SAE D 2-hole (with additional bores d= 17.5 mm)		SAE E, 4-hole		SAE E, 4-hole	
	G [mm]	-		-		-	
	H [mm]	230		-		-	
	J [mm]	20.6		27		27	
	K [mm]	228.6		224.5		224.5	
	D [mm]	40		55		55	
	N [mm]	152.4		165.1		165.1	
	V [mm]	190		-		-	
	d [mm]	-		22		22	
Drive shaft	Shaft spline according to ANSI B92.1	SAE D, E 8/16, 13 Z	16/32, 27 Z	16/32, 27 Z	SAE F 8/16, 15 Z	SAE F 8/16, 15 Z	16/32, 33 Z
	max. permissible torque [Nm]	1802	2390	2390	2904	2904	4510
	Diameter [mm]	43.71	44.05	44.05	50.06	50.06	53.57
	Usable spline length [mm]	50	62	62	58	58	58
	Shaft type	with undercut	without undercut	without undercut	without undercut	without undercut	without undercut
	Excess length [mm]	75	75	75	75	75	75

Knowledge is POWER – Motion Force Control is our Business
HYQUIP Limited New Brunswick Street Horwich Bolton Lancashire BL6 7JB UK

Mounting flange

2-hole flange

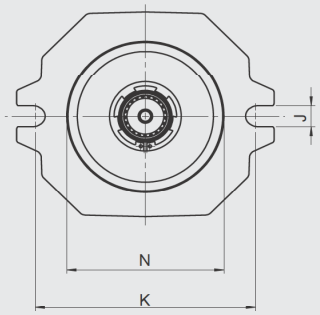

4-hole flange

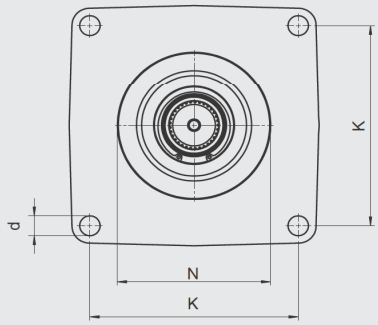

2-hole flange with 4 additional threads

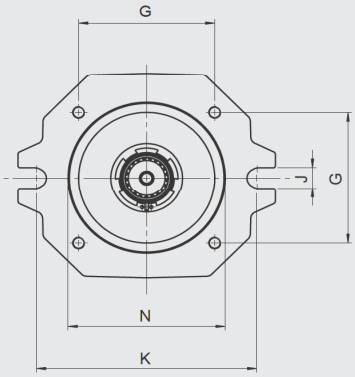

2-hole flange with 4 additional bores

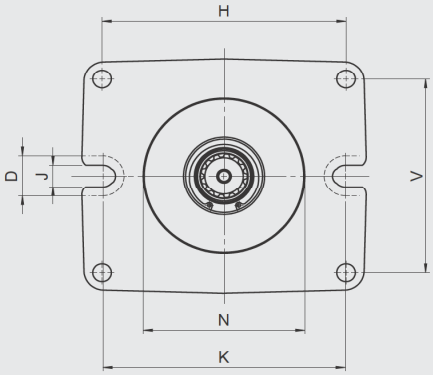

Drive shafts

Drive shaft without undercut dimensions

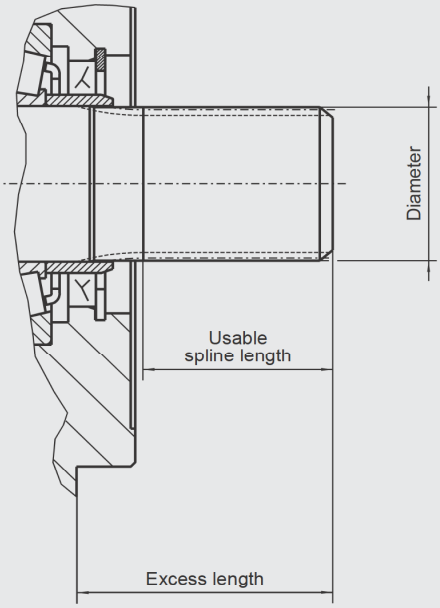

Drive shaft with undercut dimensions

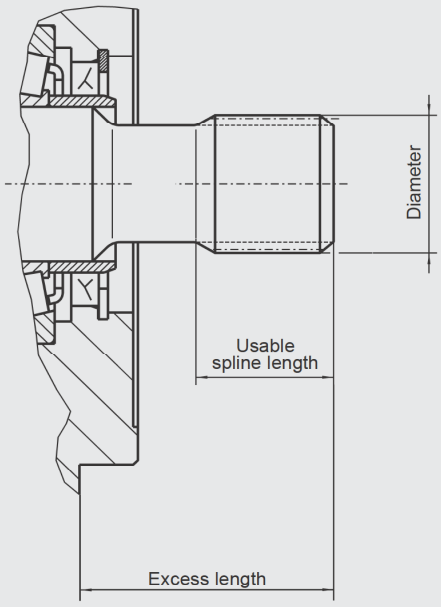

Knowledge is POWER – Motion Force Control is our Business
HYQUIP Limited New Brunswick Street Horwich Bolton Lancashire BL6 7JB UK

2.3 Max. through drive torques

Pump size		55	75	105	135	165	210	280
Through drive dimensions	D1 [mm]	40	42	48	52	63	63	72
	D2 [mm]	82.55						
	D3 [mm]	88				89.5		
	D4 [mm]	M10						M12
	D5 [mm]	30	35	38	43	44.5	47	49
	L1 [mm]	1.5				1.9		
	L2 [mm]	7				8		
	L3 [mm]	9						
	L4 [mm]	35	39	33	35	37	38.5	50.5
	L5 [mm]	14	18	19	20	25	29	30.6
	L6 [mm]	51	57.5	53	55.9	63.1	68.3	83
	L7 [mm]	3			4	3	3	-
	L8 [mm]	106.4						146
Through drive	Shaft spline according to ANSI B92.1	16/32, 15 Z	16/32, 18 Z	16/32, 19 Z	16/32, 21 Z	16/32, 22 Z	16/32, 24 Z	16/32, 27 Z
	max. through drive torque [Nm]	354	646	772	1067	1241	1643	2390

Through drive shafts

Through drive dimensions

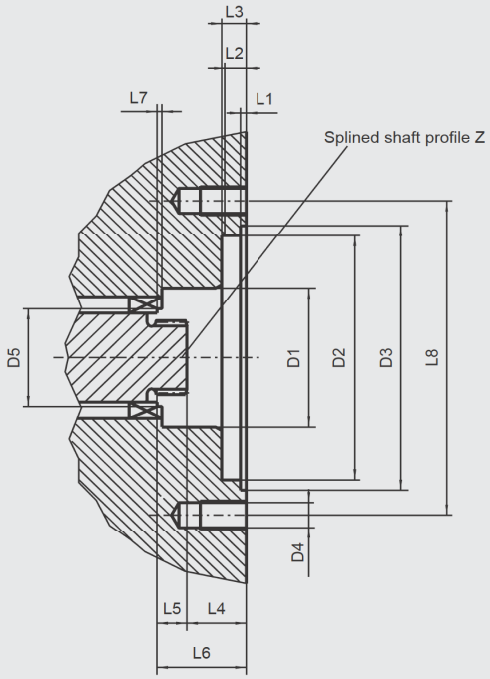

Knowledge is POWER – Motion Force Control is our Business
HYQUIP Limited New Brunswick Street Horwich Bolton Lancashire BL6 7JB UK

2.4 Seals

The pump series is equipped with fluorocarbon (FPM) seals as standard.

When using special fluids or in a particularly low ambient temperature, the seal material might need to be replaced.

For use with other sealing materials, please contact HYDAC Drive Center.

2.5 Filtration

High oil cleanliness greatly contributes to lengthening the service life of the hydraulic system.

For high functional reliability and service life	18/16/13 as per ISO 4406 or better
Minimum requirement	20/18/15 as per ISO 4406
Delivery	The minimum requirement for the cleanliness of the hydraulic oil is based on the most sensitive component in the system.
Filling and operating hydraulic systems	When filling or refilling, it must be guaranteed that the required cleanliness of the hydraulic oil is adhered to. As a rule, filling from barrels, canisters or large tanks necessitates pre-filtering of the oil. It is recommended to take appropriate measures (e.g. filters) to ensure that the required oil cleanliness is maintained even during operation.

International standards	Code number according to ISO 4406	Code number according to NAS
	18/16/13	7
	20/18/15	9

Spin-on filter

PPV200 pumps can be optionally equipped with either a pure charge pressure manifold or a combined charge pressure and filter flange manifold.
The following filter sizes are available, depending on the rated size of the unit.

Filter	55	75	105	135	165	210	280
No. 2 (¾"-thread)	x						
No. 3 (1"-thread)	x	x	x	x	x	x	x

See 5.5 for dimensions

2.6 Hydraulic fluids

The pump series is designed for use with

HLP	Hydraulic oils of R&O type (rust and oxidation inhibitor)
Biodegradable oils	according to ISO 15 380, on request

For use with other fluids, please contact HYDAC Drive Center.

2.7 Temperature range

-20 °C bis +90 °C oil temperature

Note:
The highest fluid temperature will be at the drain port of the pump. This is up to 20 °C higher than in the reservoir.

2.8 Viscosity range

Minimum viscosity:	10 cSt (mm²/s)*
Operating viscosity:	15 – 80 cSt (mm²/s)*
Maximum viscosity:	1.000 cSt (mm²/s)*

*measured at drain port

Minimum viscosity =	10 mm²/s short-term (t ≤ 1 min) at a maximum permissible leakage fluid temperature of +95 °C
Maximum viscosity =	1,000 mm²/s short-term (t ≤ 1 min) on cold start (p ≤ 30 bar, n ≤ 1,000 rev./min, t_{min} -10 °C)

For low temperature applications, please contact HYDAC Drive Center.

Knowledge is POWER – Motion Force Control is our Business
HYQUIP Limited New Brunswick Street Horwich Bolton Lancashire BL6 7JB UK

2.9 Installation instructions

The installation of the hydraulic assembly must be performed according to the wire and piping diagram and according to the device-specific installation instruction as well as the technical data sheets and installation drawings.

If electro-hydraulic circuits are performed, it must be observed that the prescribed electrical values are adhered to and e.g. the device has the prescribed voltage.

For the hydraulic pipes, seamless precision steel pipes according to EN 10305/C or hoses with suitable pressure resistance must be used. The pipes must be deburred, washed out and blown through. Scaled or rusted pipes must be pickled and then neutralised; brush out decontaminated hoses and rinse.

Cleanliness is the priority during installation of the entire hydraulic unit. Do not plug or close finished pipes with cleaning cloths but rather with plastic film or tape. Never use cleaning wool.

General information on the mechanical connection

The mechanical connection of a HYDAC axial piston pump to the drive system is performed via its housing flange and the shaft end of the primary drive.
HYDAC axial piston pumps are designed as plug on drives for a co-axial connection to a drive system, i.e. for a connection without radial or angle offset between driving and driven shafts.

See the technical data sheet, the installation diagram or the catalogue for the relevant permissible values of the transmitted shaft torques and the acting axial forces.
Radial forces on the shaft end of the HYDAC axial piston pumps must be prevented. If, for specific drive technique reasons or construction considerations, radial forces on the shaft end of a HYDAC axial piston pump cannot be avoided, please consult us already at the project design stage. This particularly applies to the direct connection (flying storage) of traction mechanisms such as for example drive belts or chains to the shaft end.

Drive and output shafts

In HYDAC axial piston pumps of the PPV200 series, the shaft ends of the primary drive or output shafts are usually designed as flange centring spline shafts with involute reference profiles according to ANSI B92.1.
The prescribed counter fitting in connection, gear or belt pulley must be observed.

Generally, during both the installation and dismantling of the drive and drive elements no impact or stress/loading (e.g. hammer blows) may act on the HYDAC axial piston pumps, as this will inevitably result in damage to the transmission gear and in particular to the shaft bearing.

In a drive system that consists stacked multiple components, usually, rotary oscillations in the drive train or drive machine, must be dampened with suitable flexible connection elements. In this case, flexible connections must be used. Their dynamic transmission characteristics must be coordinated to the drive system. In particular, it must be ensured that the system is resonance-free.

Cardan shaft

The installation instructions of the cardan shaft manufacturer must be observed!

Please contact HYDAC Drive Center before installation.

In order to avoid rotary oscillations, it must be observed that cardan shaft pieces on the drive and outlet-side are at the same angle and in one level. Only use balanced cardan shafts and ensure the correct positioning when plugging the cardan joints!

Through drive

All variable displacement pumps of the HYDAC series PPV200 are equipped with a through drive. Additional drives can be connected via this.

It must be ensured that the permissible torque is not exceeded in any operational state. Please see the permissible values in the data sheet or catalogue.

Installation

When planning the complete system and in the subsequent implementation of the installation, it must be ensured that the housing of the hydraulic pump is fully filled with hydraulic fluid in all operating modes after first filling and bleeding within the framework of the initial start-up, and cannot run empty during operation nor during temporary or longer standstill.

Installation: Horizontal, preferably with control on top for better bleeding.

For alternative installations please contact the HYDAC Drive Center.

Knowledge is POWER – Motion Force Control is our Business
HYQUIP Limited New Brunswick Street Horwich Bolton Lancashire BL6 7JB UK

2.10 Piping example

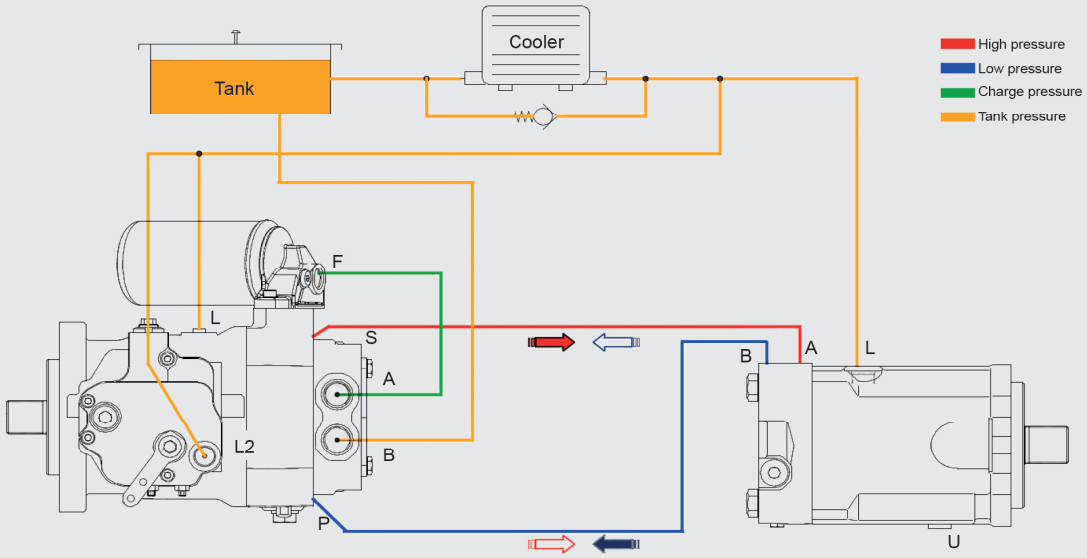

on request:

- charge pump with internal suction
- oil cooler in low-pressure circuit
- only for nominal sizes 55-135

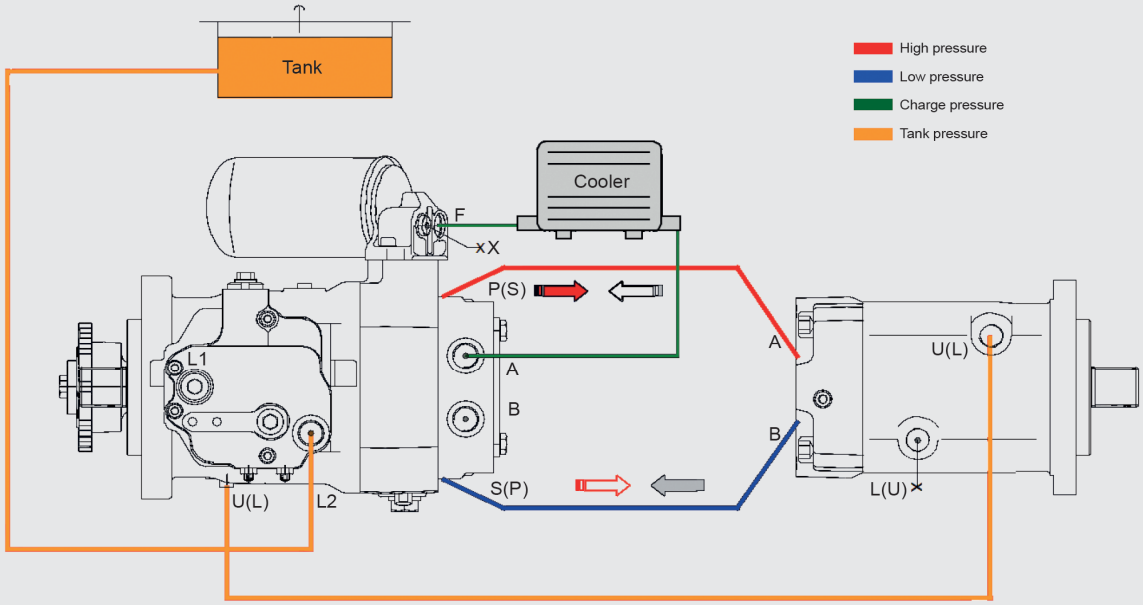

Diagrams valid for clockwise drive rotation.

Knowledge is POWER – Motion Force Control is our Business
HYQUIP Limited New Brunswick Street Horwich Bolton Lancashire BL6 7JB UK

CONTROL OPTIONS

3.1 Control overview

The modular controller concept with standardised interface allows quick selection and adaption for different customer and system requirements with mechanical, hydraulic or electronic control.
Accordingly, all adjustment mechanisms for the PPV200 have an upstream signal circuit that is adapted to the respective controls and a standardised and load-independent servo control for simple and constantly available machine control.

Control type	Mode of operation	Product
Mechanical	proportional with zero-position notch	M1R
	proportional with electrical release	M2E
Hydraulic	proportional	H1
	proportional with maximum pressure control	H1P
	depends on speed torques / performance controlled with additional unloading function	CA
Electrical	proportional	E1
	proportional with maximum pressure control	E1P
	proportional with electrical release	E2
	3-point-control	E5

M1R-control

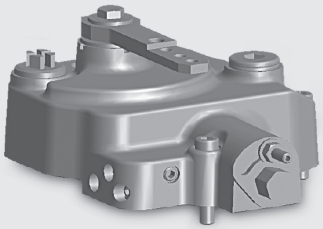

M2E-control

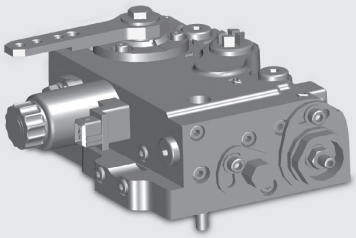

H1-control

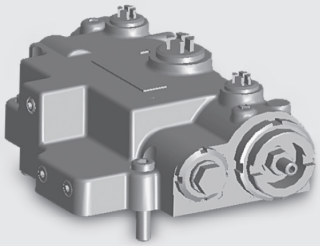

H1P-control

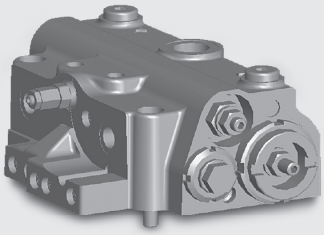

CA-control

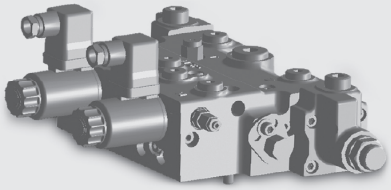

E1 / E5-control

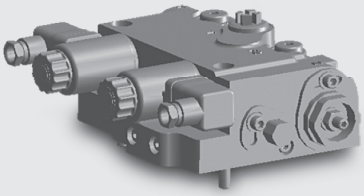

E1P-control

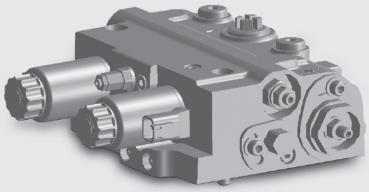

E2-control

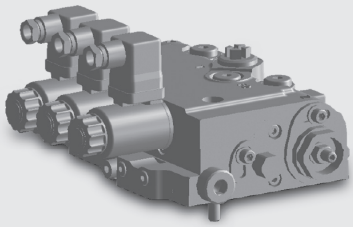

3.2 Accuracy and V_{max}-limitation

Independent of the control type, all PPV200 pump controls result in the same machine response for identical motion commands. The driver does not need to perform any readjustment and/or any electrical controls. Thanks to the permissible, load-compensating adjustment, the pump can be easily integrated into any type of vehicle management.

Precise pump adjustment performance

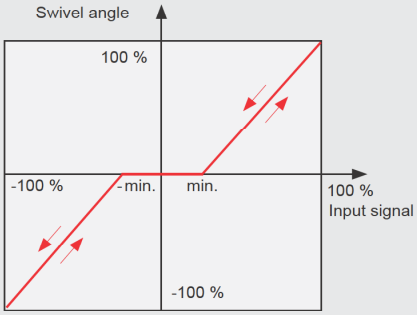

E2-control

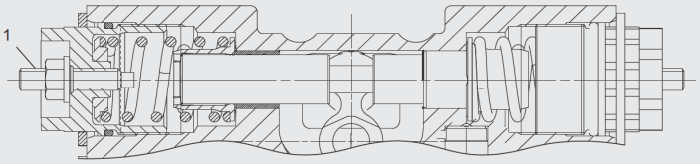

1 Flow adjustment screw max. displacement

Pump size		55	75	105	135	165	210	280
Geometric displacement	[cm³/rev]	54.7	75.9	105	135.6	165.6	210.1	281.9
Max. geometric displacement, mechanical control	[cm³/rev]	28	55	75	105	135	165	210

3.3 Maximum pressure control MDR

Adjustments made with maximum pressure control MDR reduce the pump flow rate when maximum pressure is reached. While the system pressure is maintained, the system's energy consumption and heat balance are optimised.

Displacement dependent on the pilot pressure and maximum pressure control, for H- and E-control

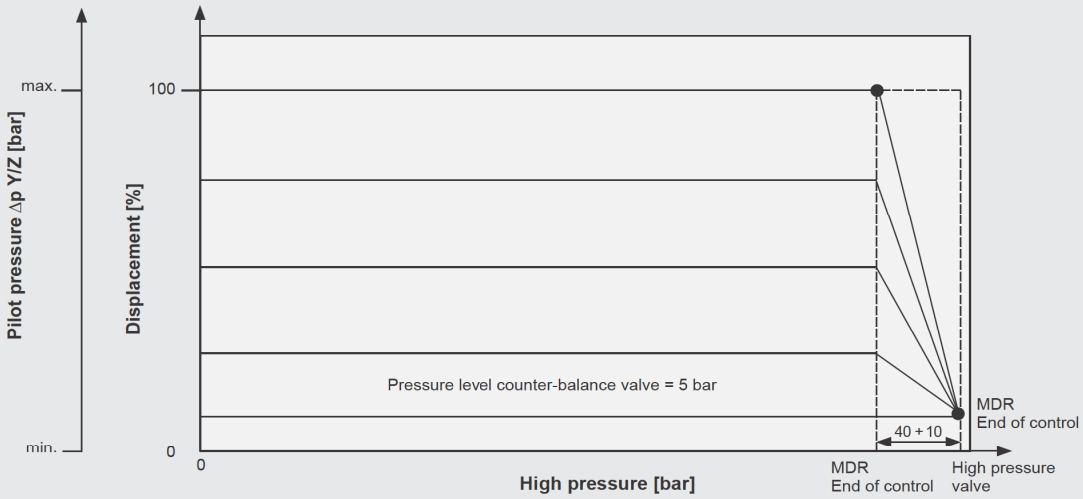

Knowledge is POWER – Motion Force Control is our Business
HYQUIP Limited New Brunswick Street Horwich Bolton Lancashire BL6 7JB UK

3.4 Mechanical-hydraulic M1R and M2E

The M1R- and M2E-control controls the pump mechanically and can be combined with fixed, variable or regulating hydraulic motor. The control-specific data is independent of the nominal pump size.

M1R – Mechanical control with zero-position notch

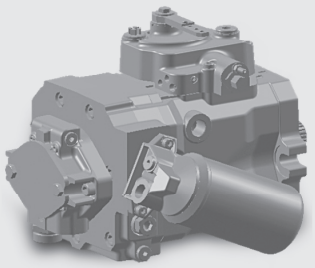

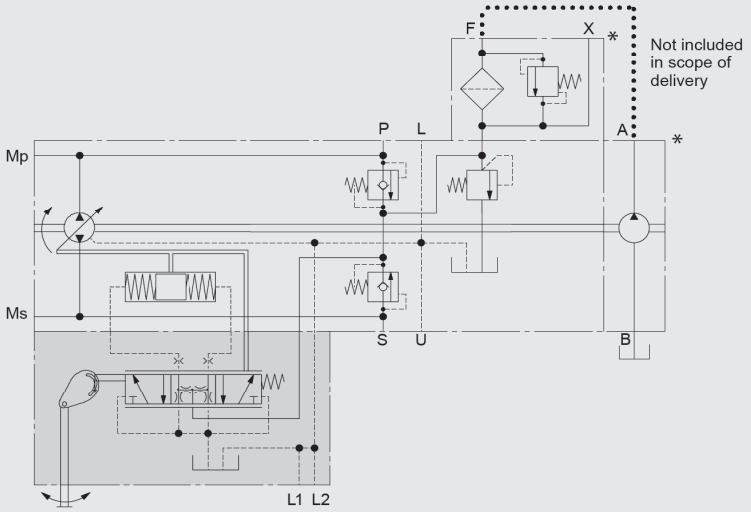

M1R – control

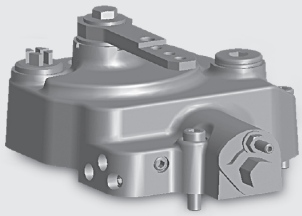

* The filter flange with filter and charge pump is optional, see ordering code 1.1

P, S	High-pressure connections
A	Pressure port, charge pump (clockwise)
B	Suction port, charge pump (clockwise)
F	Pilot pressure supply
X	Gauge port, pilot pressure
Ms, Mp	Gauge ports, high pressure
L, U	Drain ports
L1, L2	Vent ports

Notice for anti-clockwise rotation	
A	Suction port, charge pump
B	Pressure port, charge pump

Adjusting range

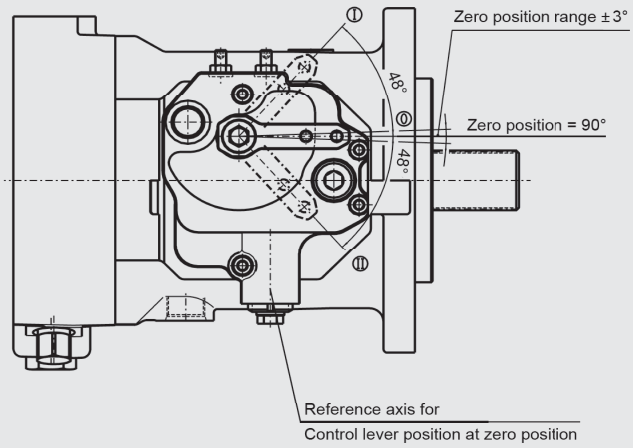

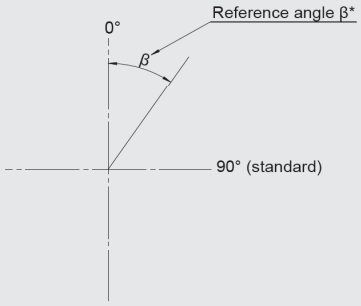

* For the dimensions of reference angle β see the ordering code "Additional controller features"

Knowledge is POWER – Motion Force Control is our Business
HYQUIP Limited New Brunswick Street Horwich Bolton Lancashire BL6 7JB UK

Flow direction

Rotating the adjustment lever controls the flow rate and the direction of the pump flow via a cam plate.

The flow direction of the oil is dependent on

- the pump's direction of rotation
- the pivoting direction of the cradle.

Oil outlet port

The cam plate offers a large control angle with progressive control characteristics thanks to a wide neutral range. The resulting high resolution when swivelling out of the zero position (and vice versa) enables precise manoeuvring. With the position feedback, reliable and robust displacement control is achieved.

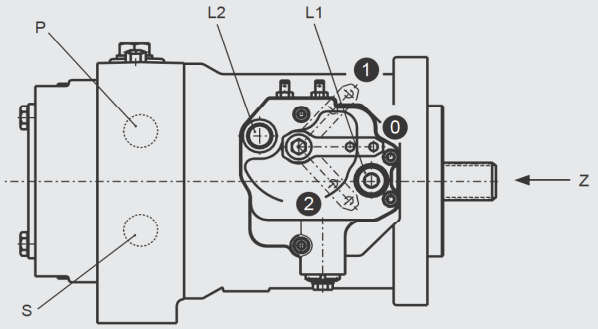

The shaft's direction of rotation (view Z)	Right 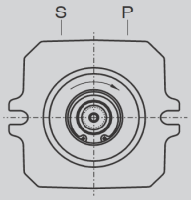	Left 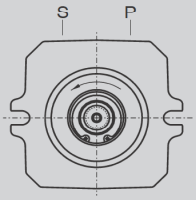
Pivoting direction of the adjustment lever		
0 → 1	P	S
0 → 2	S	P

Displacement dependent on the adjustment angle

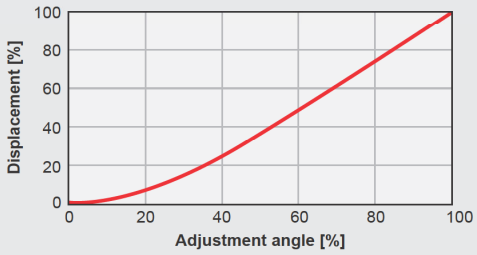

Adjustment force at max. lever radius r = 70 mm	17 N
Max. permissible adjustment force (short-term)	500 N
Adjustment torque	< 1.0 Nm
Adjustment moment from zero position	< 1.5 Nm
Zero position setting	24°, 90° (standard), 133°, 144°, 188°, 210°, 232°
Adjustment angle, zero position range to End position	±3°... ±48

Knowledge is POWER – Motion Force Control is our Business
HYQUIP Limited New Brunswick Street Horwich Bolton Lancashire BL6 7JB UK

M2E – Mechanical control with electrical release

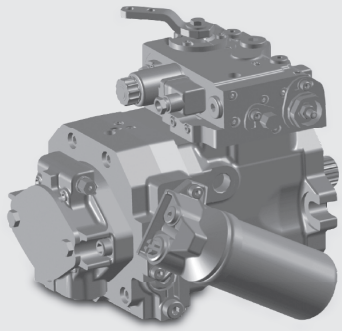

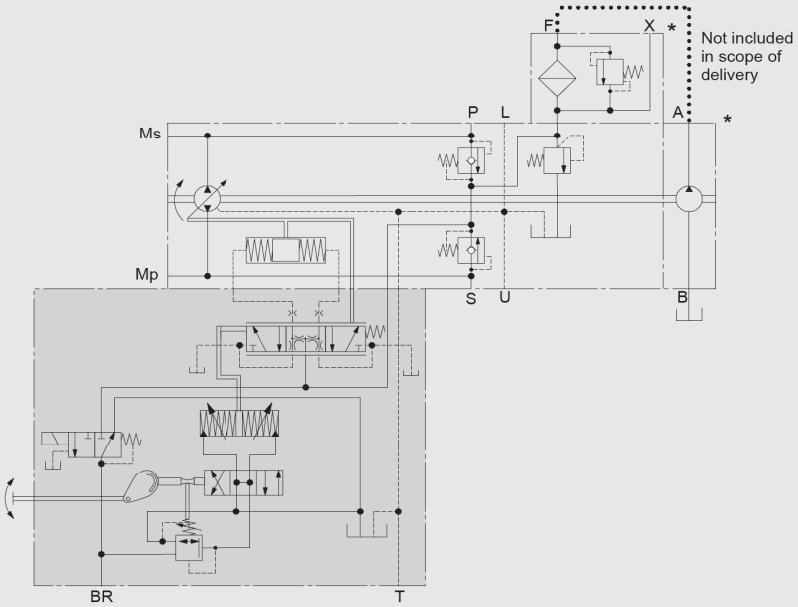

M2E – control

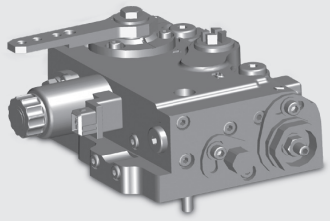

* The filter flange with filter and charge pump is optional, see ordering code 1.1

P, S	High-pressure connections
A	Pressure port, charge pump (clockwise)
B	Suction port, charge pump (clockwise)
F	Pilot pressure supply
X	Gauge port, pilot pressure
Ms, Mp	Gauge ports, high pressure
L, U	Drain ports
BR	Brake release
T	Drain and vent port

Notice for anti-clockwise rotation

A	Suction port, charge pump
B	Pressure port, charge pump

Solenoid switch		12 V	24 V
Power at minimum voltage	[mA]	1490	850
Minimum voltage	[V]	11	22
Resistance at 20 °C	[Ω]	5.3	18

Adjusting range

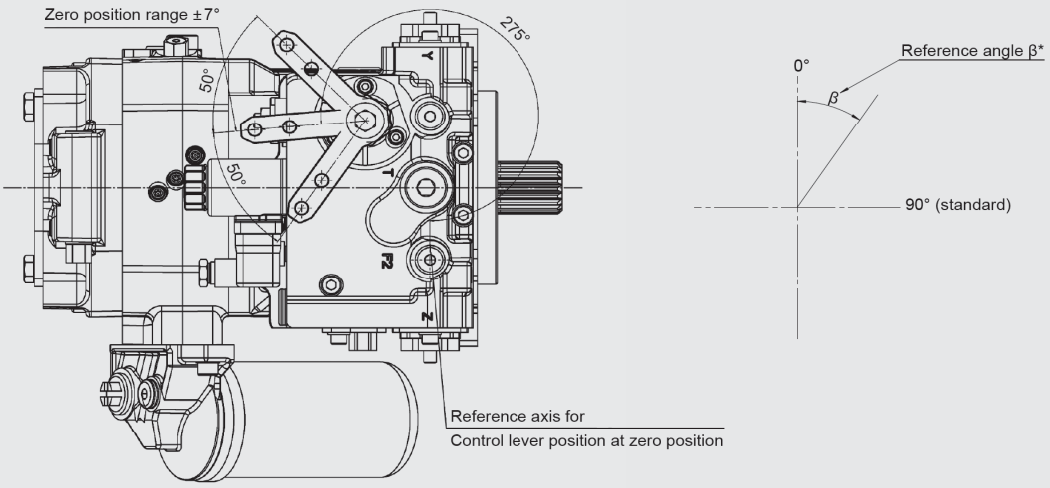

* For the dimensions of reference angle β see the ordering code "Additional controller features"

Knowledge is POWER – Motion Force Control is our Business
HYQUIP Limited New Brunswick Street Horwich Bolton Lancashire BL6 7JB UK

3.5 Hydraulic H1 and H1P

The H1- and H1P-control is controlled hydraulically and provides a large adjustment pressure range for improved machine control. It can be combined with a hydraulic motor as an adjusting, displacement or control motor.

H1 – Hydraulic control

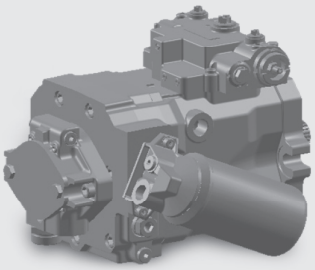

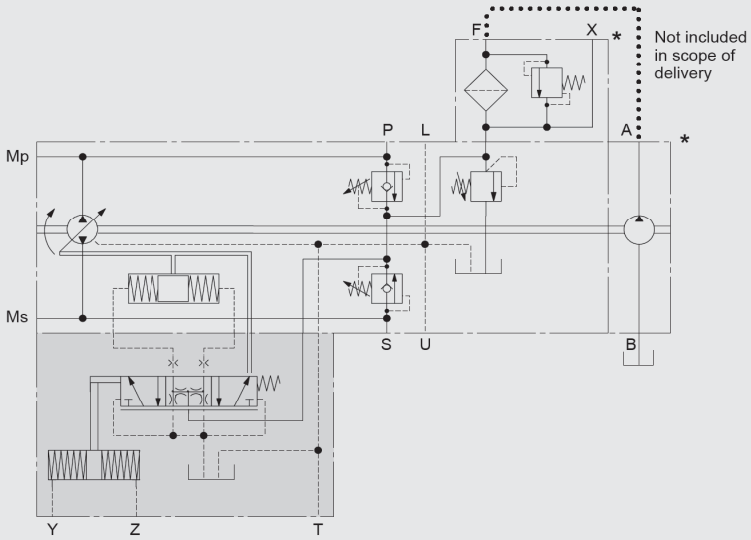

H1 – control

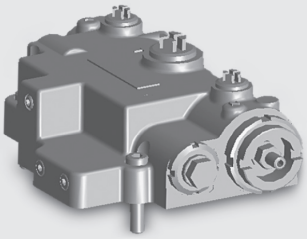

* The filter flange with filter and charge pump is optional, see ordering code 1.1

P, S	High-pressure connections
A	Pressure port, charge pump (clockwise)
B	Suction port, charge pump (clockwise)
F	Pilot pressure supply
X	Gauge port, pilot pressure
Ms, Mp	Gauge ports, high pressure
L, U	Drain ports
T	Drain and vent port
Y, Z	Pilot pressure ports

Notice for anti-clockwise rotation	
A	Suction port, charge pump
B	Pressure port, charge pump

Knowledge is POWER – Motion Force Control is our Business
HYQUIP Limited New Brunswick Street Horwich Bolton Lancashire BL6 7JB UK

Flow direction

An external hydraulic input signal to the pilot pressure ports (Y, Z) controls the flow rate and the direction of the pump flow. The flow direction of the oil is dependent on the pump's direction of rotation and the pivoting direction of the adjustable cradle.

Oil outlet port

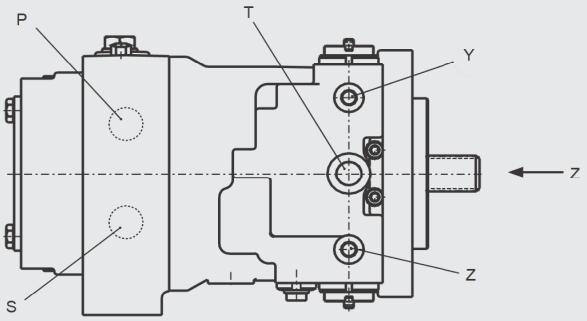

The shaft's direction of rotation (view Z)	Right 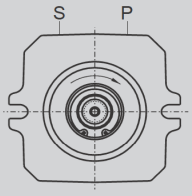	Left 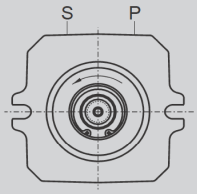
Pilot pressure at port		
Y	P	S
Z	S	P

Displacement dependent on the pilot pressure

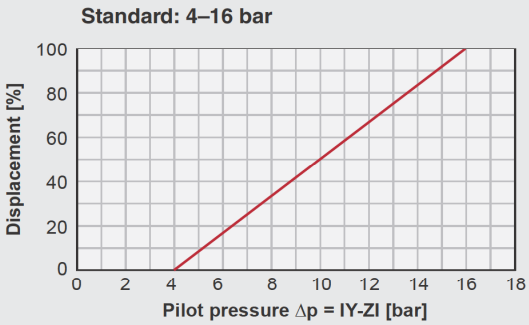

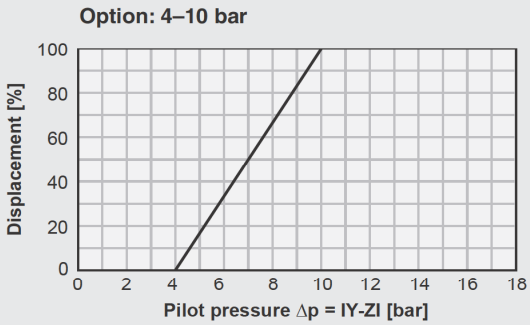

Adjustment pressure range	Standard: 4–16 bar, optional 4–10 bar differential pressure |Y-Z|
Maximum permissible pilot pressure at Y or Z	30 bar

Knowledge is POWER – Motion Force Control is our Business
HYQUIP Limited New Brunswick Street Horwich Bolton Lancashire BL6 7JB UK

H1P – hydraulic control with MDR

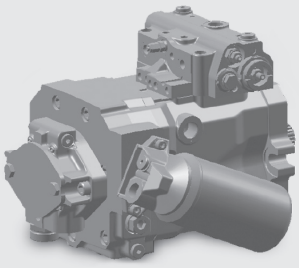

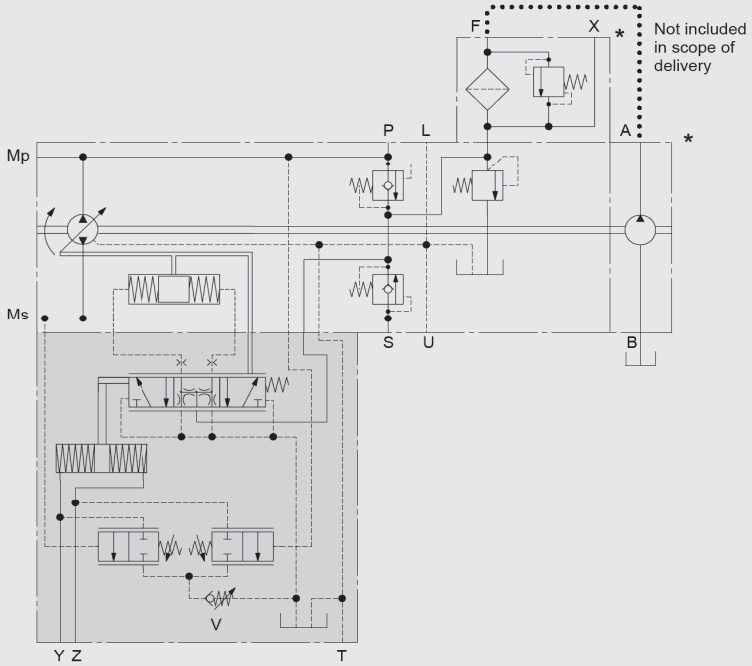

H1P – control with MDR

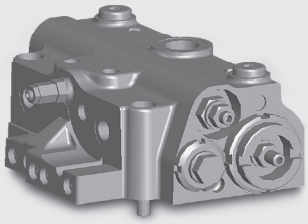

* The filter flange with filter and charge pump is optional, see ordering code 1.1

P, S	High-pressure connections
A	Pressure port, charge pump (clockwise)
B	Suction port, charge pump (clockwise)
F	Charge pressure supply
X	Charge pressure gauge port
Ms, Mp	Gauge ports, high pressure
L, U	Drain ports
T	Drain and vent port
Y, Z	Pilot pressure ports
V	Counter-balance valve

Notice for anti-clockwise rotation	
A	Suction port, charge pump
B	Pressure port, charge pump

Knowledge is POWER – Motion Force Control is our Business
HYQUIP Limited New Brunswick Street Horwich Bolton Lancashire BL6 7JB UK

Flow direction

An external hydraulic input signal to the pilot pressure ports (Y, Z) controls the flow rate and the direction of the pump flow. The flow direction of the oil is dependent on the pump's direction of rotation and the pivoting direction of the cradle.

Oil outlet port

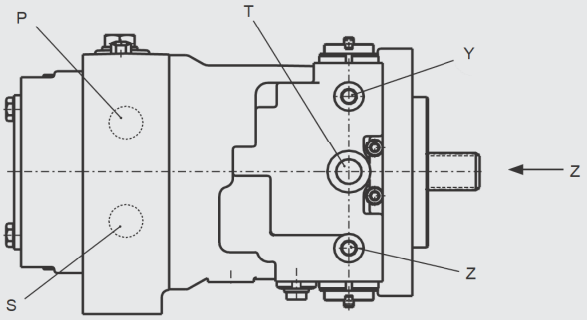

The shaft's direction of rotation (view Z)	Right 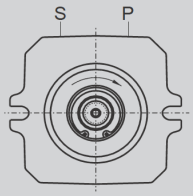	Left 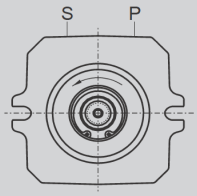
Pilot pressure at port		
Y	P	S
Z	S	P

Displacement dependent on the pilot pressure

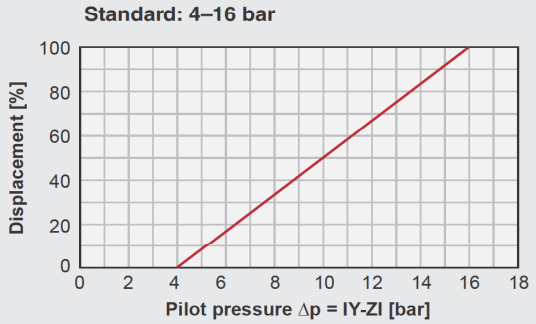

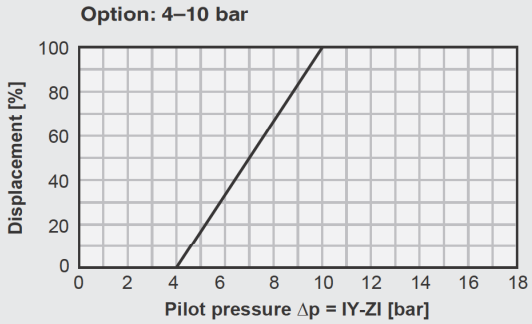

Adjustment pressure range	Standard: 4–16 bar, optional 4–10 bar differential pressure |Y-Z|
Maximum permissible pilot pressure at Y or Z	30 bar

Knowledge is POWER – Motion Force Control is our Business
HYQUIP Limited New Brunswick Street Horwich Bolton Lancashire BL6 7JB UK

3.6 Mechanical-hydraulic CA and CAF

The PPV200 CA and PPV200 CAF are drive-speed-dependent pump controller with torque/power regulation. They can be combined with a hydraulic motor as fixed, variable or regulating motor and variable motor with pressure regulator.
The modular design offer great variability in function and control.

CA – Hydraulic-mechanical control

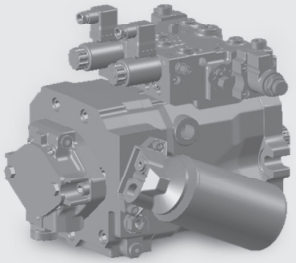

CA – control

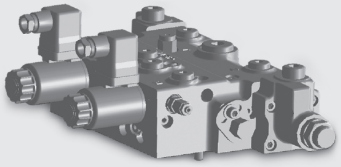

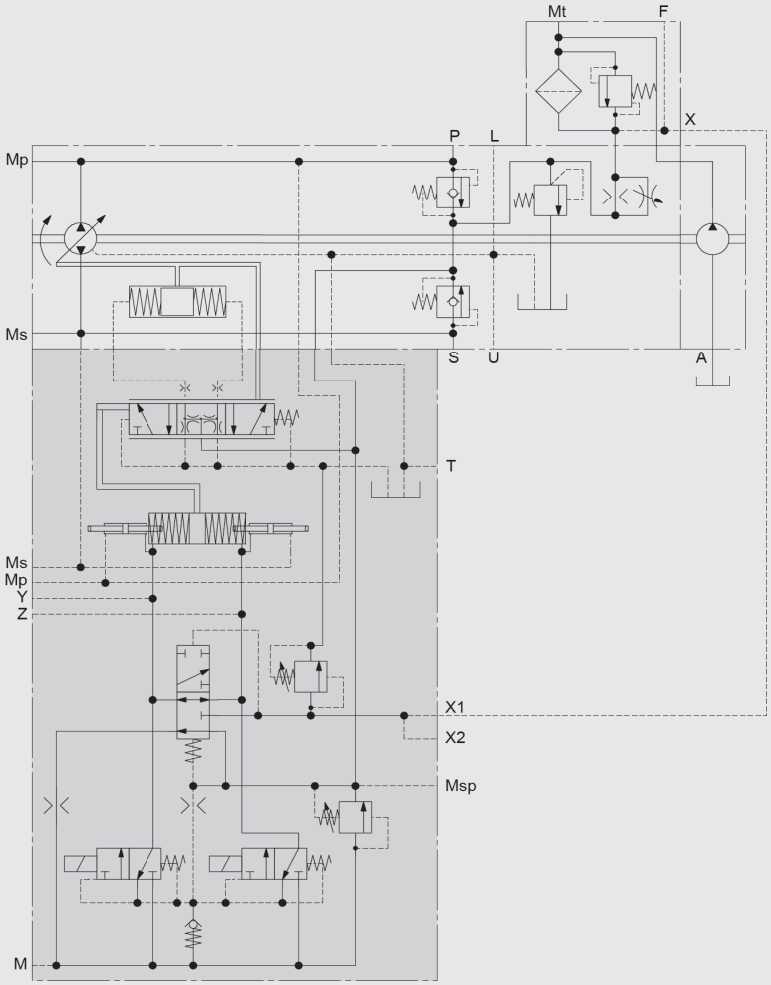

Technical layout CA and CAF on request

Solenoid switch		12 V	24 V
Power at minimum voltage	[mA]	1490	850
Minimum voltage	[V]	11	22
Resistance at 20 °C	[Ω]	5.3	18

P, S	High-pressure connections
A	Suction port, charge pump (clockwise)
F	Pilot pressure supply
	Measurement ports
Mt	e.g. for temperature measurement
Ms, Mp	High pressure
Y, Z	Pilot pressure
M	For performance adjustment and inching pressure port
Msp	Charge pressure
X, X1, X2	Pilot pressure ports MPV
L, U	Drain ports
T	Drain and vent port
Notice for anti-clockwise rotation	
A	Suction port, charge pump

Knowledge is POWER – Motion Force Control is our Business
HYQUIP Limited New Brunswick Street Horwich Bolton Lancashire BL6 7JB UK

3.7 Electro-hydraulic E1

The E1-control is equipped with two proportional control solenoids. No readjustment of the pump is needed from the driver or from the electronics.

E1 – Electro-hydraulic control

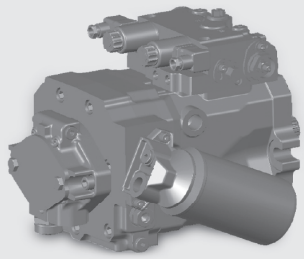

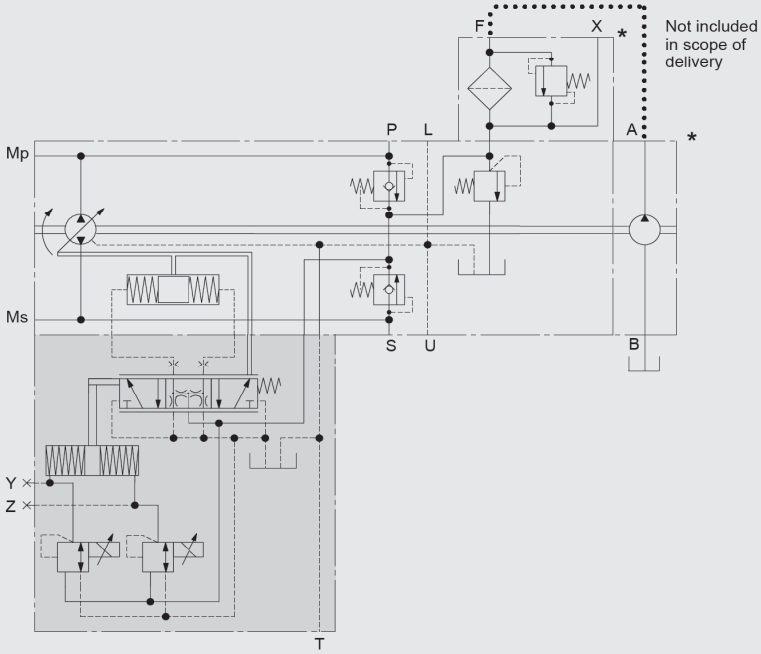

E1 – control

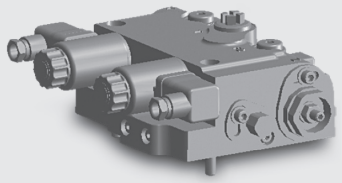

* The filter flange with filter and charge pump is optional, see ordering code 1.1

P, S	High-pressure connections
A	Pressure port, charge pump (clockwise)
B	Suction port, charge pump (clockwise)
F	Pilot pressure supply
X	Gauge port, pilot pressure
Ms, Mp	Gauge ports, high pressure
L, U	Drain ports
T	Drain and vent port
Y, Z	Gauge ports, control pressure

Notice for anti-clockwise rotation	
A	Suction port, charge pump
B	Pressure port, charge pump

Knowledge is POWER – Motion Force Control is our Business
HYQUIP Limited New Brunswick Street Horwich Bolton Lancashire BL6 7JB UK

Displacement dependent on the control flow

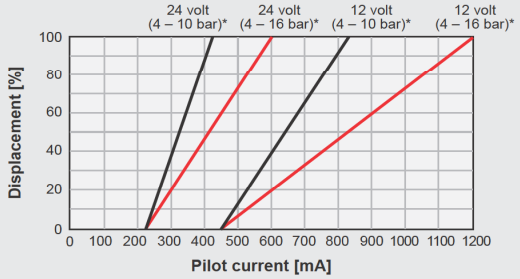

Piston compression spring

Characteristics, pilot signal

Supply voltage = continuous limit voltage			V	12	24
Connector type				DIN EN 175301-803, Deutsch, AMP Junior Timer (2-pin)	
Type of voltage				DC voltage	
Power consumption			W	15.6	
Nominal current = continuous limit current			mA	1300	650
Pilot current	Start of adjustment		mA	450 ± 10	225 ± 5
	for mechanical V_{max}-limitation see 3.2	Pilot pressure range 4–16 bar (standard)		1200	600
		Pilot pressure range 4–10 bar (option)		810	410
Relative duty cycle			%	100	
Protection class				IP54 (DIN), IP67 (Deutsch), IP6K6K (AMP)	
Control	Digital via pulse width modulation PWM			100 Hz, rectangular dither, duty cycle variable via control range	
	Analogue			Dither-superimposed direct current (dither frequency nominally 35 Hz, duty cycle 1:1) more details on request	

Knowledge is POWER – Motion Force Control is our Business
HYQUIP Limited New Brunswick Street Horwich Bolton Lancashire BL6 7JB UK

3.8 Electro-hydraulic E1P

In addition to the E1-control, the E1P-control is equipped with a maximum pressure relief valve.

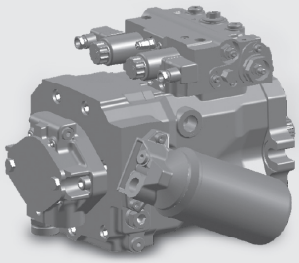

E1P – control

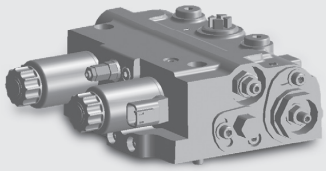

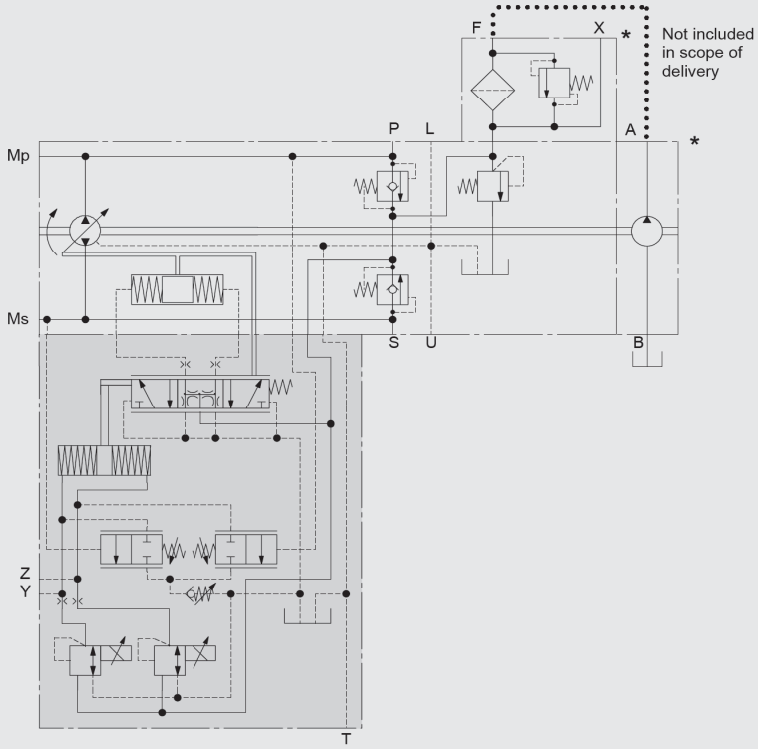

* The filter flange with filter and charge pump is optional, see ordering code 1.1

P, S	High-pressure connections
A	Pressure port, charge pump (clockwise)
B	Suction port, boo charge st pump (clockwise)
F	Pilot pressure supply
X	Gauge port, pilot pressure
Ms, Mp	Gauge ports, high pressure
L, U	Drain ports
T	Drain and vent port
Y, Z	Gauge ports, control pressure

Notice for anti-clockwise rotation

A	Suction port, charge pump
B	Pressure port, charge pump

For the adjustment of the maximum pressure relief valves
see 3.3 Maximum pressure control MDR

Knowledge is POWER – Motion Force Control is our Business
HYQUIP Limited New Brunswick Street Horwich Bolton Lancashire BL6 7JB UK

Displacement dependent on the control flow

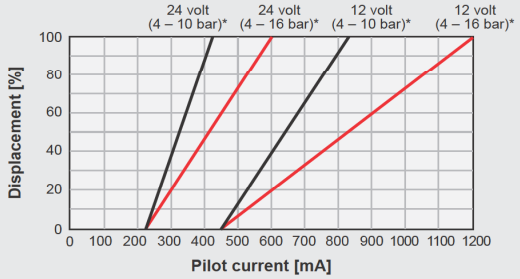

Piston compression spring

Characteristics, pilot signal

Supply voltage = continuous limit voltage			V	12	24
Connector type				DIN EN 175301-803, Deutsch, AMP Junior Timer (2-pin)	
Type of voltage				DC voltage	
Power consumption			W	15.6	
Nominal current = continuous limit current			mA	1300	650
Pilot current	Start of adjustment		mA	450 ± 10	225 ± 5
	for mechanical V_{max}-limitation see 3.2	Pilot pressure range 4–16 bar (standard)		1200	600
		Pilot pressure range 4–10 bar (option)		810	410
Relative duty cycle			%	100	
Protection class				IP54 (DIN), IP67 (Deutsch), IP6K6K (AMP)	
Control	Digital via pulse width modulation PWM			100 Hz, rectangular dither, duty cycle variable via control range	
	Analogue			Dither-superimposed direct current (dither frequency nominally 35 Hz, duty cycle 1:1) more details on request	

Knowledge is POWER – Motion Force Control is our Business
HYQUIP Limited New Brunswick Street Horwich Bolton Lancashire BL6 7JB UK

3.9 Electro-hydraulic E2

The E2-control is equipped with two proportional control solenoids and one switching solenoid. The switching solenoid enables a release function witch could be integrated easily in an electronic vehicle management control system. This means, the required safety standard for a road approval is ensured.

E2 – Electro-hydraulic control

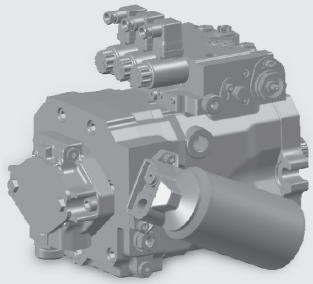

E2 – control

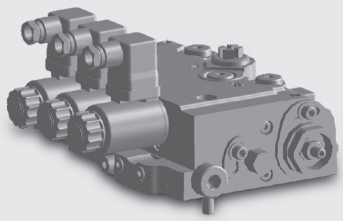

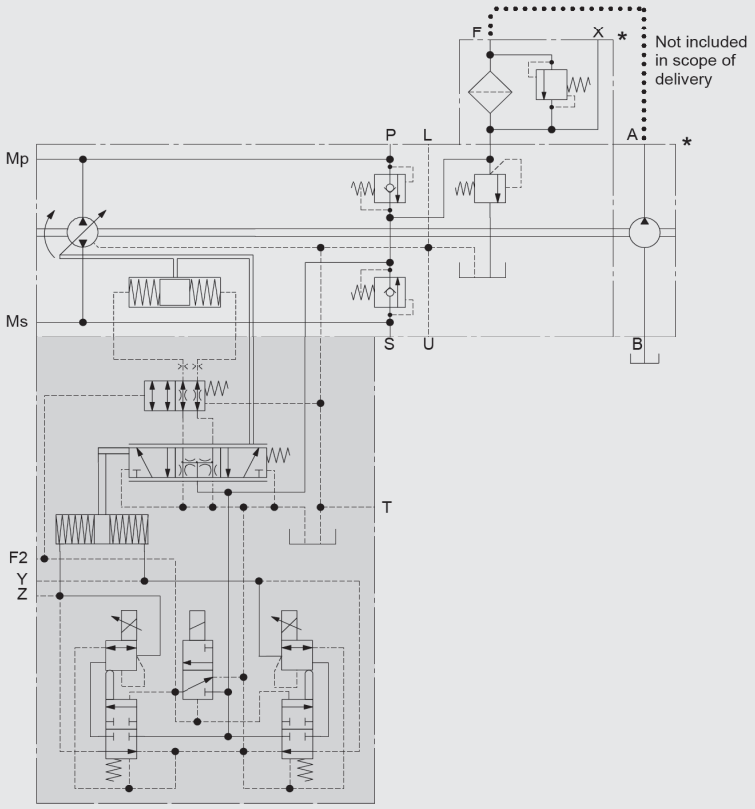

* The filter flange with filter and charge pump is optional, see ordering code 1.1

Proportional solenoid		12 V	24 V
Power at minimum voltage	[mA]	1300	650
Minimum voltage	[V]	11	22
Resistance at 20 °C	[Ω]	5.3	23.4

P, S	High-pressure connections
A	Pressure port, charge pump (clockwise)
B	Suction port, charge pump (clockwise)
F	Pilot pressure supply
X	Gauge port, pilot pressure
Ms, Mp	Gauge ports, high pressure
L, U	Drain ports
F2, Y, Z	Gauge ports, control pressure
T	Drain and vent port

Notice for anti-clockwise rotation	
A	Suction port, charge pump
B	Pressure port, charge pump

Knowledge is POWER – Motion Force Control is our Business
HYQUIP Limited New Brunswick Street Horwich Bolton Lancashire BL6 7JB UK

Displacement dependent on the control flow

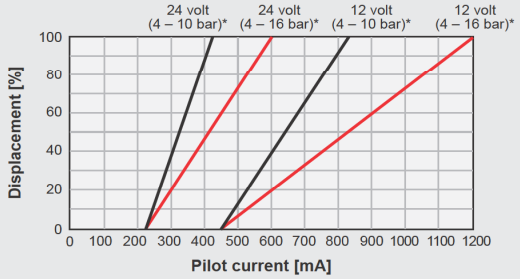

Piston compression spring

Characteristics, pilot signal

Supply voltage = continuous limit voltage			V	12	24
Connector type				DIN EN 175301-803, Deutsch, AMP Junior Timer (2-pin)	
Type of voltage				DC voltage	
Power consumption			W	15.6	
Nominal current = continuous limit current			mA	1300	650
Pilot current	Start of adjustment		mA	450 ± 10	225 ± 5
	for mechanical V_{max}-limitation see 3.2	Pilot pressure range 4–16 bar (standard)		1200	600
		Pilot pressure range 4–10 bar (option)		810	410
Relative duty cycle			%	100	
Protection class				IP54 (DIN), IP67 (Deutsch), IP6K6K (AMP)	
Control	Digital via pulse width modulation PWM			100 Hz, rectangular dither, duty cycle variable via control range	
	Analogue			Dither-superimposed direct current (dither frequency nominally 35 Hz, duty cycle 1:1) more details on request	

Knowledge is POWER – Motion Force Control is our Business
HYQUIP Limited New Brunswick Street Horwich Bolton Lancashire BL6 7JB UK

3.10 Electro-hydraulic 3-point-control E5

The E5-control has two control solenoids.
The pump can therefore be switched into three digital circuits, $-V_{max}$, 0 or $+V_{max}$.

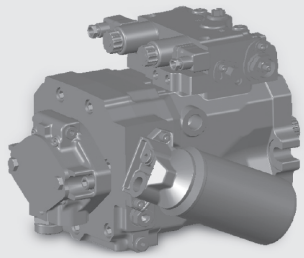

E5 – control

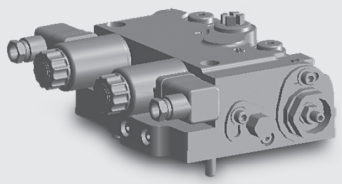

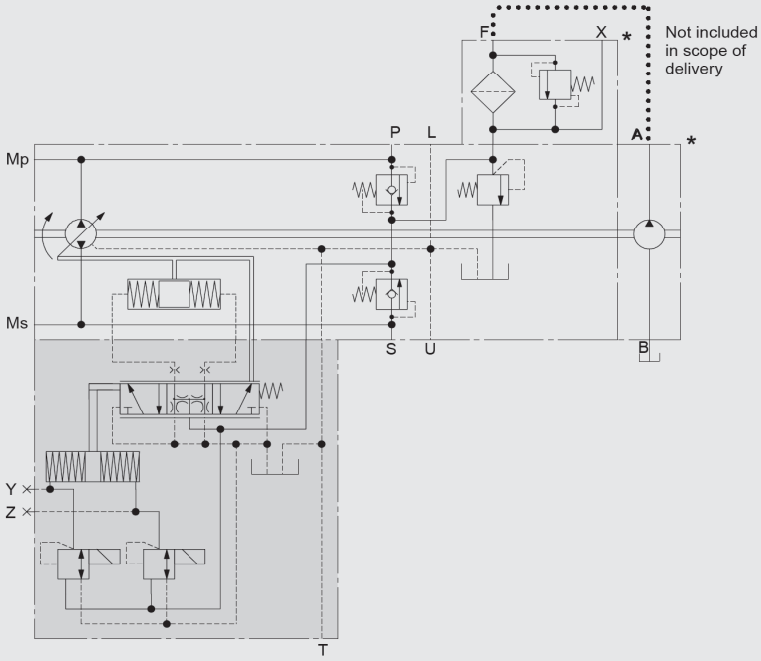

* The filter flange with filter and charge pump is optional, see ordering code 1.1

Solenoid switch		12 V	24 V
Power at minimum voltage	[mA]	1490	850
Minimum voltage	[V]	11	22
Resistance at 20 °C	[Ω]	5.3	18

P, S	High-pressure connections
A	Pressure port, charge pump (clockwise)
B	Suction port, charge pump (clockwise)
F	Pilot pressure supply
X	Gauge port, pilot pressure
Ms, Mp	Gauge ports, high pressure
L, U	Drain ports
T	Drain and vent port
Y, Z	Gauge ports, control pressure

Notice for anti-clockwise rotation

A	Suction port, charge pump
B	Pressure port, charge pump

Knowledge is POWER – Motion Force Control is our Business
HYQUIP Limited New Brunswick Street Horwich Bolton Lancashire BL6 7JB UK

CHARGE PUMP

4.1 Technical specification

The gear pumps are available as charge pumps in two models: internal gear pump PGI and external gear pump PGE.

The possible combinations of PGI and PGE are determined by the through drive option and the permissible shaft torque. Both models can be used as charge pump for the main circuit, or else for the open-loop control and cooling circuit.

The charge relief valves are integrated into the end cover of the PPV200 for sizes 55–105 and in the filter flange of the PPV200 for the sizes 135–280.

Displacement		16	19	22.5	31	38	44
Standard as charge pump for PPV200	Nominal size	55 – 105		75 – 135	165	210	280
Gear pump type		PGI	PGE	PGI	PGE	PGE	PGE
Porting pattern and according to SAE J744 and shaft spline according to ANSI B92.12 *		SAE A 16/32, 18 Z	SAE A 16/32, 9 Z	SAE A 16/32, 18 Z	SAE A 16/32, 9 Z	SAE A 16/32, 13 Z	SAE A 16/32, 13 Z
PGI suction port B (with ISO 6149 or DIN 3852, depending on main pump)		M36x2 with ISO 8434-1 L28	–	M36x2 with ISO 8434-1 L28	–	–	–
PGI suction port A (with ISO 6149 or DIN 3852, depending on main pump)		M27x2	–	M27x2	–	–	–
PGI direction of rotation	Clockwise: Suction port B and pressure port A Anticlockwise: Suction port A and pressure port B						
PGE suction port B		–	4-hole 35/15/M6x13	–	4-hole 55/26/M8x13	SAE J518C - 1 ¼" (6000 PSI, Code 62) M10x18	SAE J518C - 1 ¼" (6000 PSI, Code 62) M10x18
PGE pressure port connection A		–	4-hole 35/15/M6x13	–	4-hole 35/18/M6x13	SAE J518C - 1" (6000 PSI, Code 62) M10x18	SAE J518C - 1" (6000 PSI, Code 62) M10x18
PGE direction of rotation		–	R	–	R	R/L	R
Max. permissible operating pressure observer permissible filter and cooler nominal pressure	bar	40	210	40	165	275	220
Standard through drive flange according to SAE J744 and standard spline according to ANSI B92.1		SAE A 16/32, 9 Z	–	SAE A 16/32, 9 Z	–	–	–
Max. output torque	Nm	250 107 Nm with SAE A	–	250 107 Nm with SAE A	–	–	–
Cold-start valve		integrated	–	integrated	–	–	–
Min. suction pressure	bar	0.8 abs					
Max. suction pressure	bar	3 abs					

* more sizes available on request

Knowledge is POWER – Motion Force Control is our Business
HYQUIP Limited New Brunswick Street Horwich Bolton Lancashire BL6 7JB UK

External gear pump

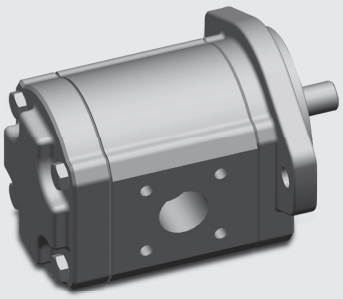

Internal gear pump

The PGI charge pumps have a cold-start valve and a through drive for attaching additional pumps.

PGIs are available in the sizes 16 cm³/rev. and 22.5 cm³/rev.

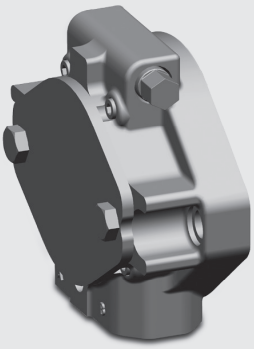

Knowledge is POWER – Motion Force Control is our Business
HYQUIP Limited New Brunswick Street Horwich Bolton Lancashire BL6 7JB UK

4.2. Through drive flange on PGI

Flange profile, 2-hole	SAE A	SAE B	SAE B-B	SAE C
Z splined shaft profile according to ANSI B92.1	16/32, 9 Z	16/32, 13 Z	16/32, 15 Z	12/24, 14 Z
D1 [mm]	82.55	101.6		127
D2 [mm]	M10	M12		M16
L1 [mm]	106.4	146		181
L2 [mm]	7	11		13
L3 [mm]	–	55		72
Max. transferable torque [Nm]	107	250		

Through drive SAE - A to PGI

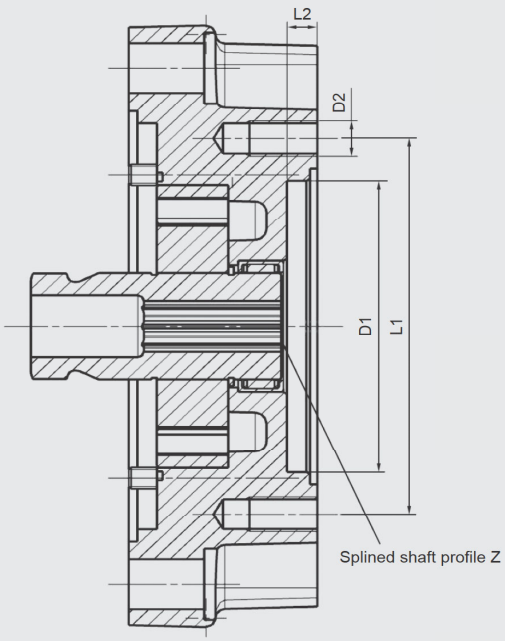

Through drive SAE - B, - B-B and -C to PGI (via intermediate flange)

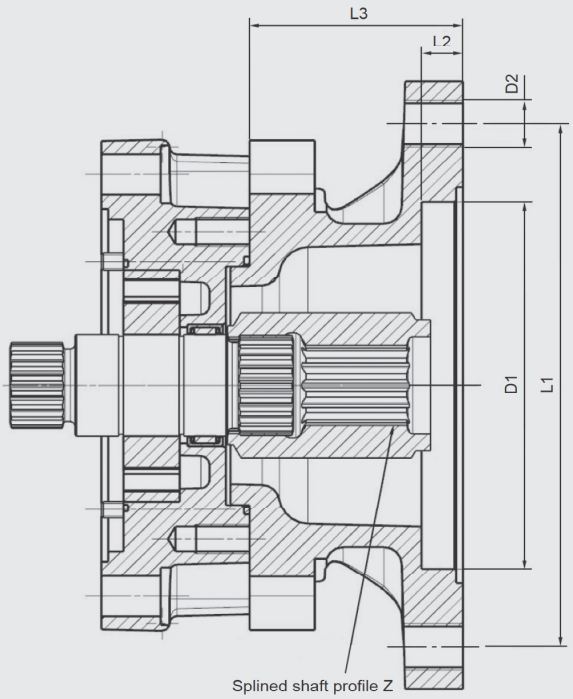

Knowledge is POWER – Motion Force Control is our Business
HYQUIP Limited New Brunswick Street Horwich Bolton Lancashire BL6 7JB UK

DIMENSIONS

5.1 PPV200 with Mx-control

Dimensions for PPV200 with mechanical-hydraulic control.

Ports and dimensions for Mx-control

Nominal size	55	75	105	135	165	210	280
D1 [mm]	127			152.4		165.1	
B1 [mm]	181			228.6		224	225
B2 [mm]	101	116		141	141	142	155
B3 [mm]	101	116		141	138.5	135	–
B4 [mm]	192	216		219	233	240	246
B5 [mm]	194						
L1 [mm]	225	242	267	288	319.5	346	392
L2 [mm]	282	304	329	350	485.5	516	571
L3 [mm]	335	359	385	425	560.4	591	646
L4 [mm]	151						
L5 [mm]	70						
L6 [mm]	48						
H1 [mm]	88	93	99	106	119.5	134	152
H2 [mm]	95	103	105	112	122.5	133	150
H3 [mm]	184	188	193	198	214.5	226	238
P	SAE ¾"	SAE 1"		SAE 1¼"		SAE 1½"	
S	SAE ¾"	SAE 1"		SAE 1¼"		SAE 1½"	
L	M22x1.5			M27x2		M27x2	M33x2
U	M22x1.5			M27x2		M27x2	M33x2
F	M22x1.5				M27x2		
X	M14x1.5						
Mp	M14x1.5						
Ms	M14x1.5						
T1	M22x1.5						
T2	M22x1.5						
A	see chapter 4. Charge pump - 4.1 Technical specifications						
B	see chapter 4. Charge pump - 4.1 Technical specifications						

Knowledge is POWER – Motion Force Control is our Business
HYQUIP Limited New Brunswick Street Horwich Bolton Lancashire BL6 7JB UK

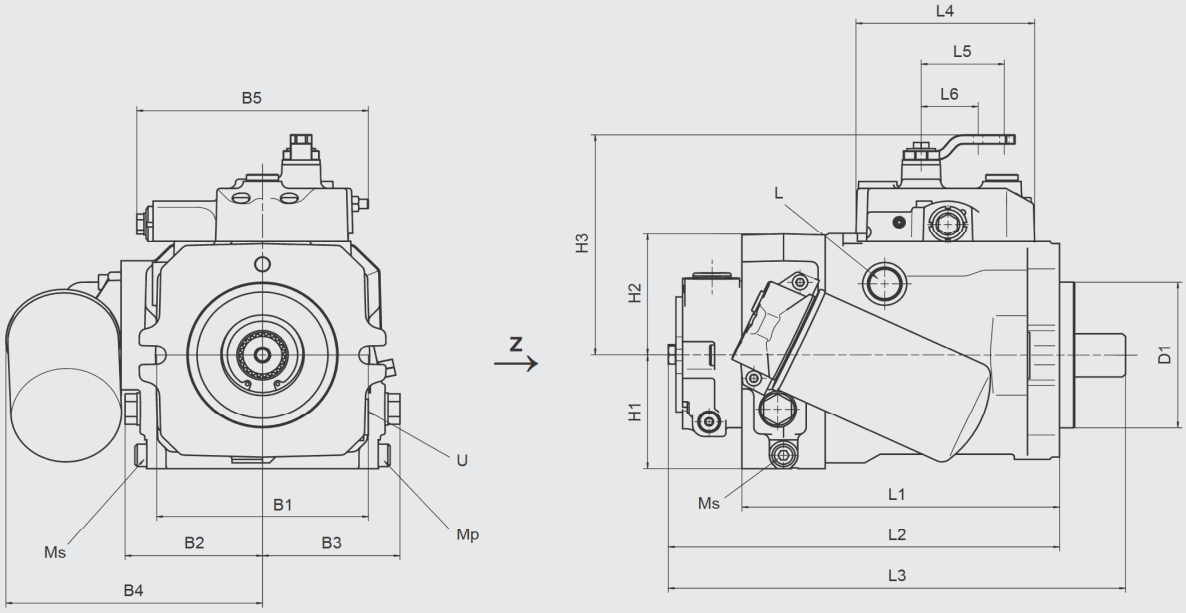

View Z

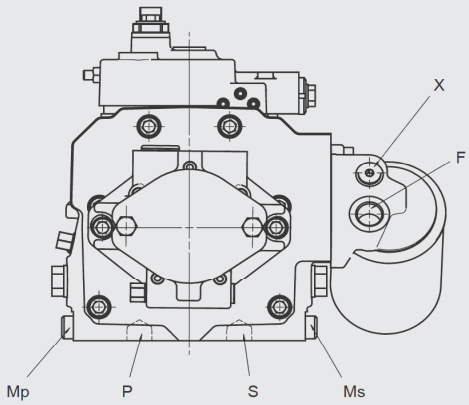

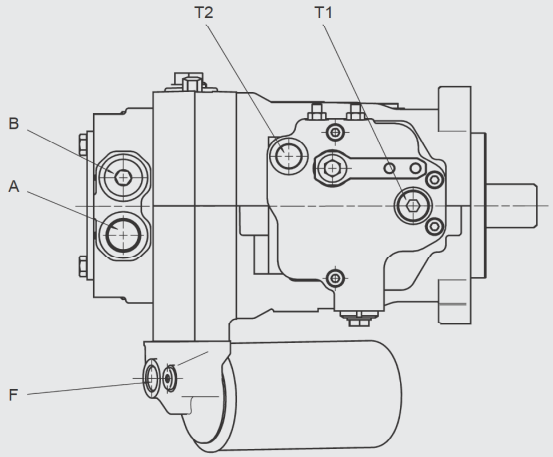

- Threaded connection, metric in acc. with ISO 6149-1 (F, U, L, L2)
- PGI suction port in acc. with ISO 8434-1 L28
- High-pressure ports in acc. with ISO 6162-2 (S, P)
- Cheese-head screws in acc, with ISO 4762
- Others threads available on request

Threaded connection, metric in acc. with ISO 6149-1

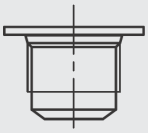

Knowledge is POWER – Motion Force Control is our Business
HYQUIP Limited New Brunswick Street Horwich Bolton Lancashire BL6 7JB UK

5.2 PPV200 with Hx-control

Dimensions for PPV200 with hydraulic-mechanical control.

Ports and dimensions for Hx-control

Nominal size		55	75	105	135	165	210	280
D1 [mm]		127			152.4		165.1	
B1 [mm]		181			228.6		224	225
B2 [mm]		101	116		141	134.5	143	155
B3 [mm]		101	116		141	134.5	135	139
B4 [mm]		192	216		219	233	240	246
B5 [mm]		231						
L1 [mm]		225	242	267	288	319.5	346	392
L2 [mm]		282	304	329	350	485.5	516	571
L3 [mm]		335	359	385	425	560.4	591	646
L4 [mm]		133						
H1 [mm]		88	93	99	106	119.5	134	152
H2 [mm]		95	103	105	112	122.5	133	150
H3 [mm]	without MDR	194	154	158	163	187	191	204
	with MDR	185	190	194	199	223	201	214
P		SAE ¾"	SAE 1"		SAE 1¼"		SAE 1½"	
S		SAE ¾"	SAE 1"		SAE 1¼"		SAE 1½"	
L		M22x1.5			M27x2			M33x2
U		M22x1.5			M27x2			M33x2
F		M22x1.5				M27x2		M27x2
T		M22x1.5						
X		M14x1.5						
Mp		M14x1.5						
Ms		M14x1.5						
Y		M14x1.5						
Z		M14x1.5						
A		see chapter 4. Charge pump - 4.1 Technical specifications						
B		see chapter 4. Charge pump - 4.1 Technical specifications						

Knowledge is POWER – Motion Force Control is our Business
HYQUIP Limited New Brunswick Street Horwich Bolton Lancashire BL6 7JB UK

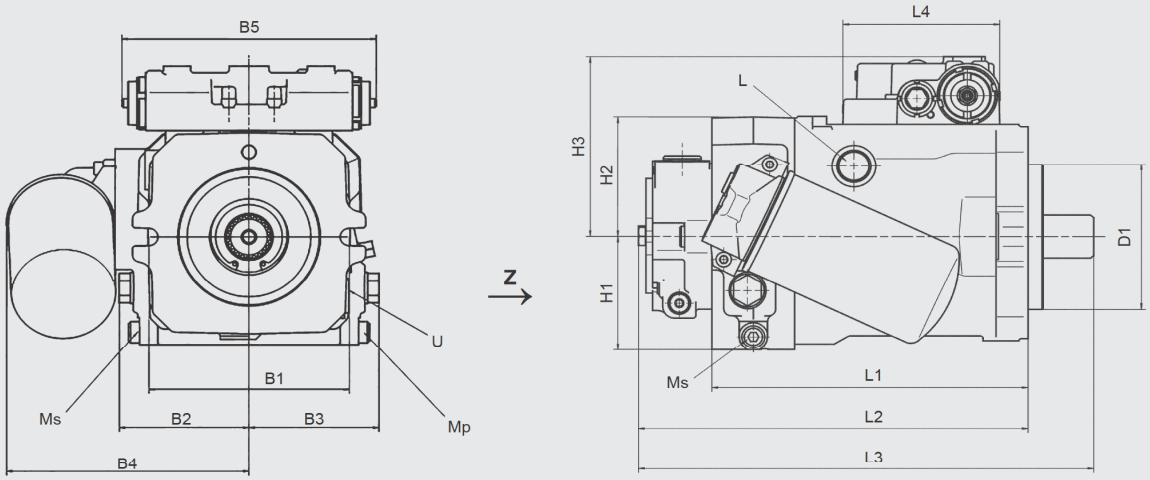

View Z

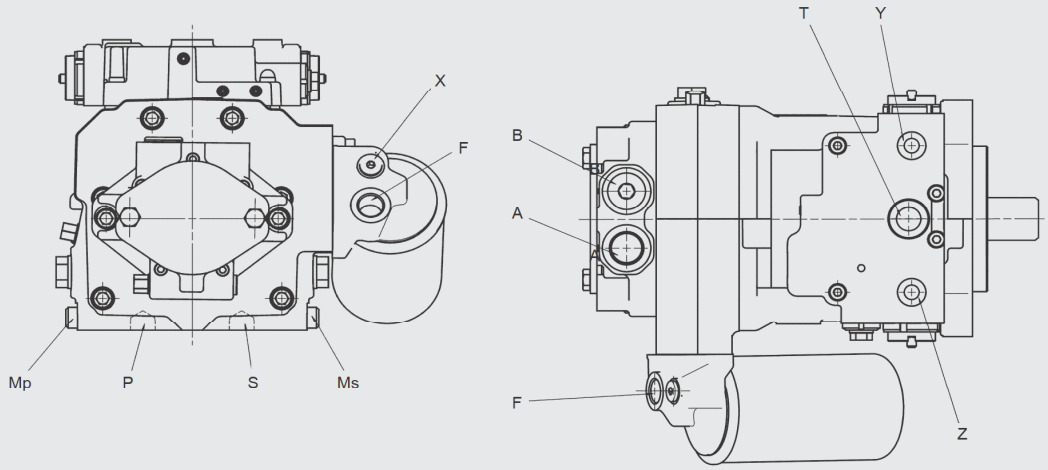

- Threaded connection, metric in acc. with ISO 6149-1 (F, U, L, L2)
- PGI suction port in acc. with ISO 8434-1 L28
- High-pressure ports in acc. with ISO 6162-2 (S, P)
- Cheese-head screws in acc, with ISO 4762
- Others threads available on request

Threaded connection, metric in acc. with ISO 6149-1

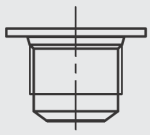

Knowledge is POWER – Motion Force Control is our Business
HYQUIP Limited New Brunswick Street Horwich Bolton Lancashire BL6 7JB UK

5.3 PPV200 with CA-control

Dimensions for PPV200 with hydraulic-mechanical control.

Ports and dimensions for CA-control

Nominal size	55	75	105	135
D1 [mm]	127			152.4
B1 [mm]	181			228.6
B2 [mm]	101	116		141
B3 [mm]	101	116		141
B4 [mm]	193	212	214	217
B5 [mm]	336			
L1 [mm]	225	242	267	288
L2 [mm]	282	306	331	351.5
L3 [mm]	343	361	386.3	426.1
L4 [mm]	207			
H1 [mm]	88	93	99	105.5
H2 [mm]	95	103	99	104
H3 [mm]	178	184	187.8	191.1
P	SAE 1"			
S	SAE 1"			
L	M22x1.5			
U	M22x1.5			
F	M22x1.5			
T	M22x1.5			
X1	M14x1.5			
Mp	M14x1.5			
Ml	M14x1.5			
Ms	M14x1.5			
Msp	M14x1.5			
Mt	M14x1.5			
Y	M14x1.5			
Z	M14x1.5			
A	see chapter 4. Charge pump - 4.1 Technical specifications			
B	see chapter 4. Charge pump - 4.1 Technical specifications			

Knowledge is POWER – Motion Force Control is our Business
HYQUIP Limited New Brunswick Street Horwich Bolton Lancashire BL6 7JB UK

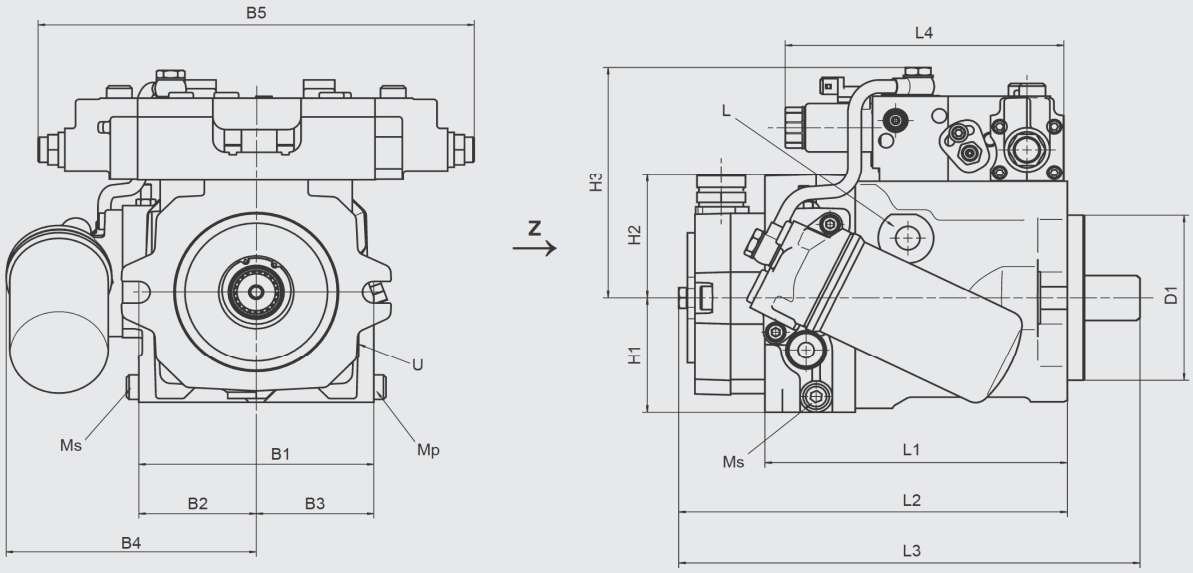

View Z

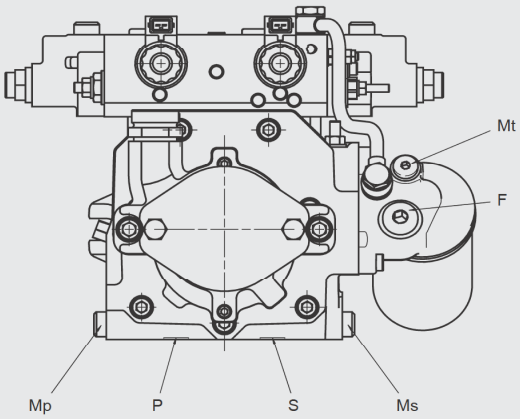

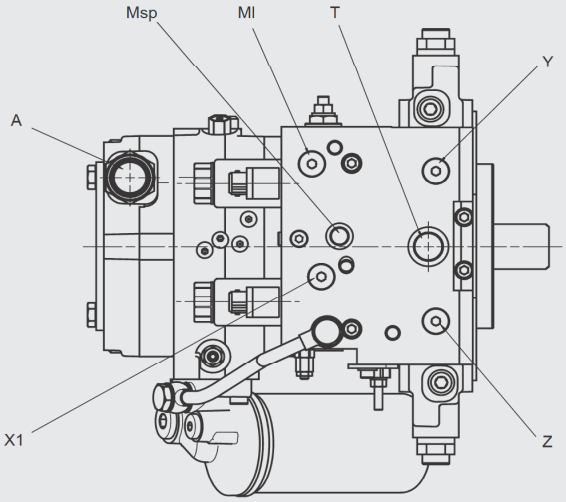

- Threaded connection, metric in acc. with ISO 6149-1 (F, U, L, L2)
- PGI suction port in acc. with ISO 8434-1 L28
- High-pressure ports in acc. with ISO 6162-2 (S, P)
- Cheese-head screws in acc, with ISO 4762
- Others threads available on request

Threaded connection, metric in acc. with ISO 6149-1

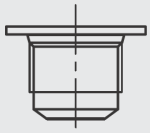

Knowledge is POWER – Motion Force Control is our Business
HYQUIP Limited New Brunswick Street Horwich Bolton Lancashire BL6 7JB UK

5.4 PPV200 with Ex-control

Dimensions for PPV200 with elector-hydraulical control.

Ports and dimensions for Ex-control

Nominal size	55	75	105	135	165	210	280
D1 [mm]	127			152.4		165.1	
B1 [mm]	181			228.6		224	225
B2 [mm]	101	116		141	134.5	143	155
B3 [mm]	101	116		141	134.5	135	139
B4 [mm]	192	216		219	233	240	246
B5 [mm] E1	226						
B5 [mm] E2	230						
L1 [mm]	225	242	267	288	319.5	346	392
L2 [mm]	282	304	329	350	485.5	516	571
L3 [mm]	335	359	385	425	560.4	591	646
L4 [mm]	183						
H1 [mm]	88	93	99	106	119.5	134	152
H2 [mm]	95	103	105	112	122.5	133	150
H4 [mm] E1/E2 With AMP-JT connectors	159	164	168	173	189.5	218	231
H4 [mm] E1 With DIN connectors	195	200	204	209	225.5	254	(267)
P	SAE ¾"	SAE 1"		SAE 1¼"		SAE 1½"	
S	SAE ¾"	SAE 1"		SAE 1¼"		SAE 1½"	
Mp	M14x1.5						
Ms	M14x1.5						
L	M22x1.5			M27x2			M33x2
U	M22x1.5			M27x2			M33x2
F	M22x1.5				M27x2		
T	M22x1.5						
X	M14x1.5						
Y	M14x1.5						
Z	M14x1.5						
F2	M14x1.5						
A	see chapter 4. Charge pump - 4.1 Technical specifications						
B	see chapter 4. Charge pump - 4.1 Technical specifications						

Knowledge is POWER – Motion Force Control is our Business
HYQUIP Limited New Brunswick Street Horwich Bolton Lancashire BL6 7JB UK

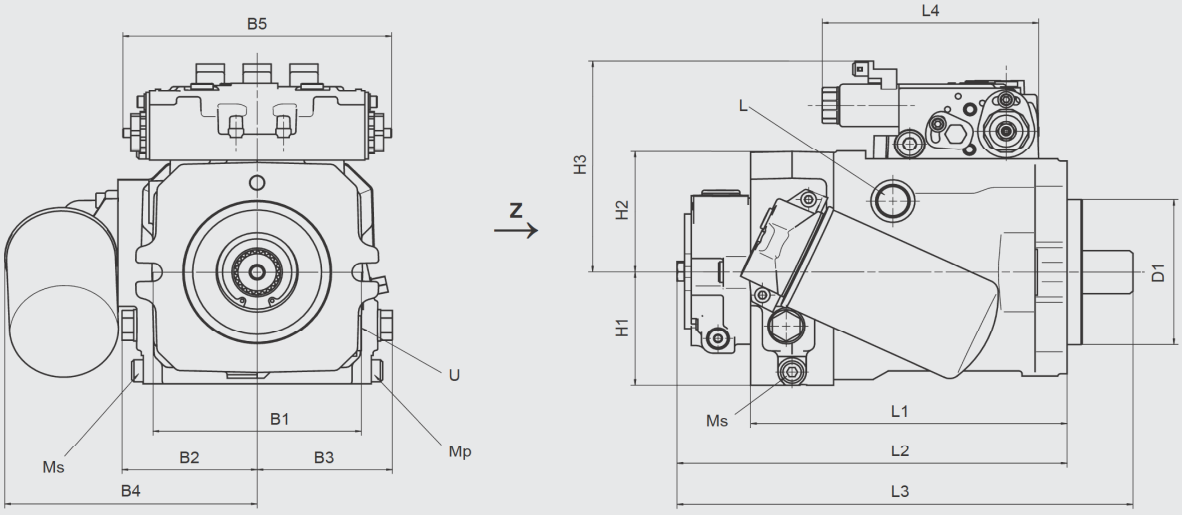

View Z

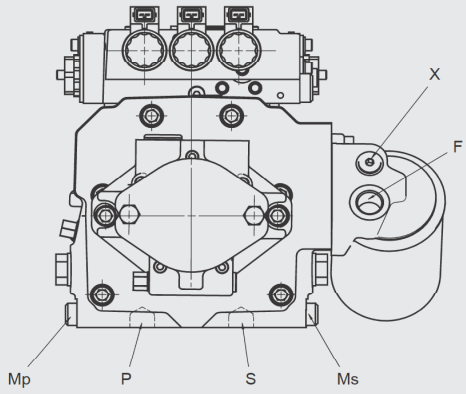

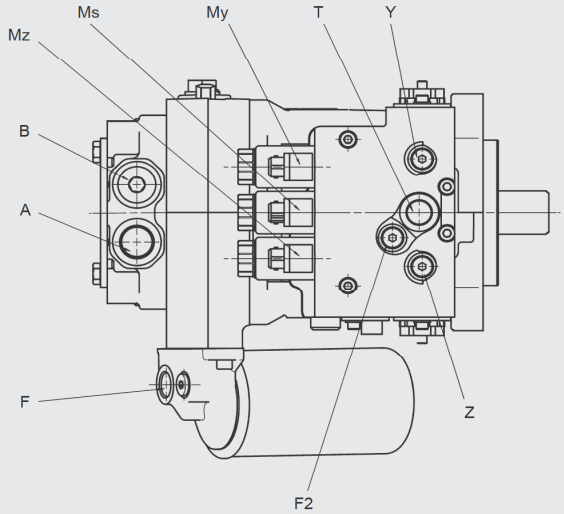

- Threaded connection, metric in acc. with ISO 6149-1 (F, U, L, L2)
- PGI suction port in acc. with ISO 8434-1 L28
- High-pressure ports in acc. with ISO 6162-2 (S, P)
- Cheese-head screws in acc, with ISO 4762
- Others threads available on request

Threaded connection, metric in acc. with ISO 6149-1

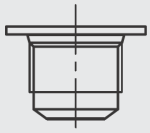

Knowledge is POWER – Motion Force Control is our Business
HYQUIP Limited New Brunswick Street Horwich Bolton Lancashire BL6 7JB UK

5.5 Modular system

The following illustrations show the proportions of similar components.

Through drive view 1

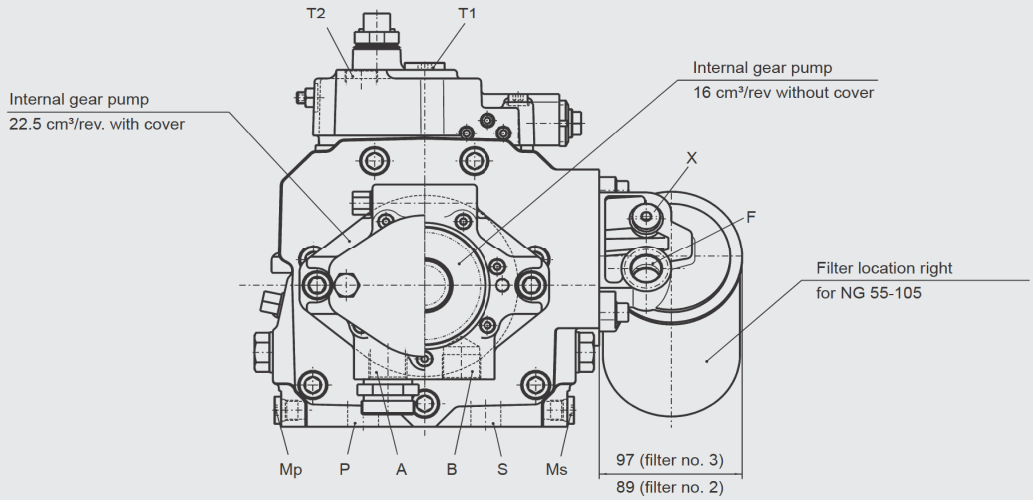

- M1R-control
- PGI 22.5 cm³/rev. with cover
- PGI 16 cm³/rev. without cover
- Mounting side, filter, for size 55 - 105 cm³/rev

Side view

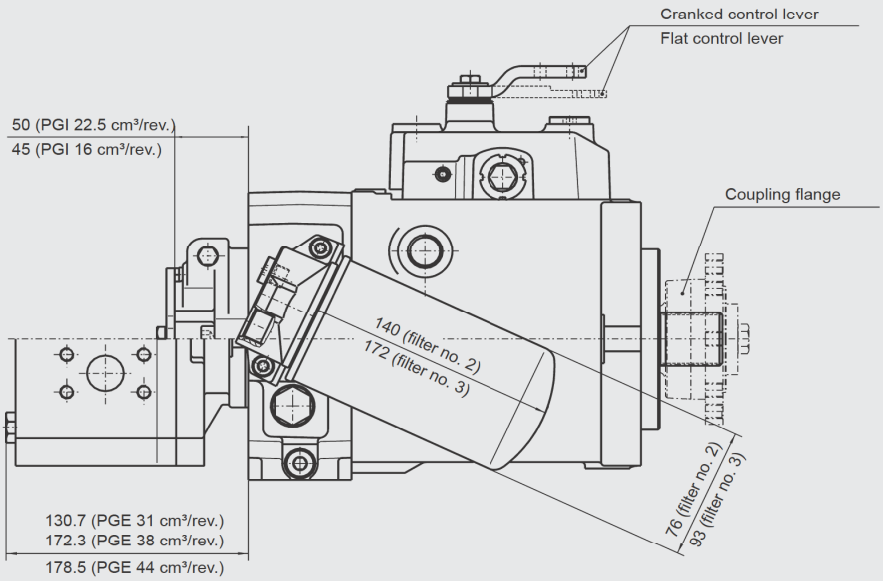

- Filter attachment parts for size 55 - 105 cm³/rev.
- M1R-control lever
- PGI
- PGE
- Filter
- Coupling flange

Knowledge is POWER – Motion Force Control is our Business
HYQUIP Limited New Brunswick Street Horwich Bolton Lancashire BL6 7JB UK

The following illustrations show the proportions of similar components.

Through drive view 2

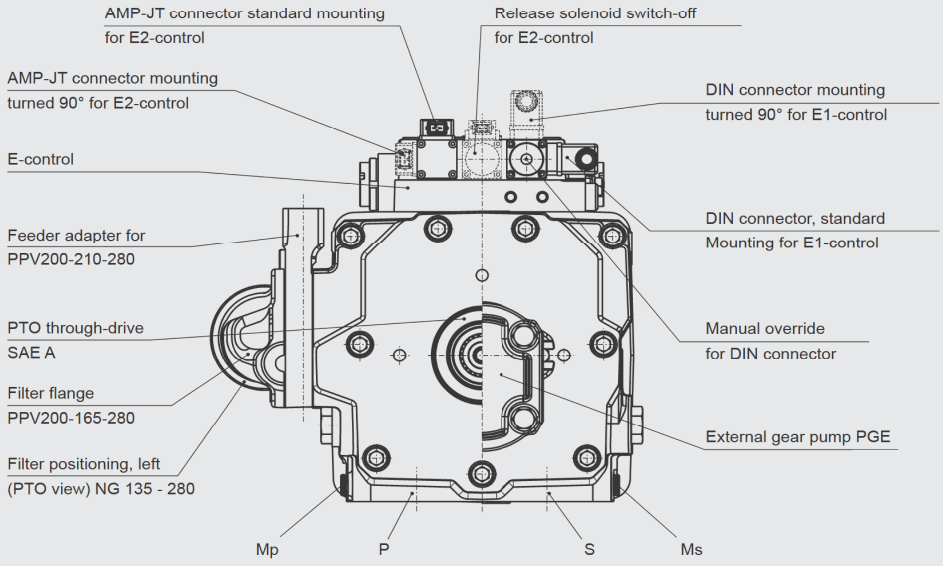

- E1-control with assembly direction, solenoid connector
- E2-control with assembly direction, solenoid connector
- Manual override
- DIN connector
- AMP-JT connector
- Deutsch connector
- Mounting side, filter, for size 135- 280cm³/rev
- Feeder adapter for size 165, 210 and 280 without filter
- SAE A through drive mounting flange
- External gear pump

Mounting flange view

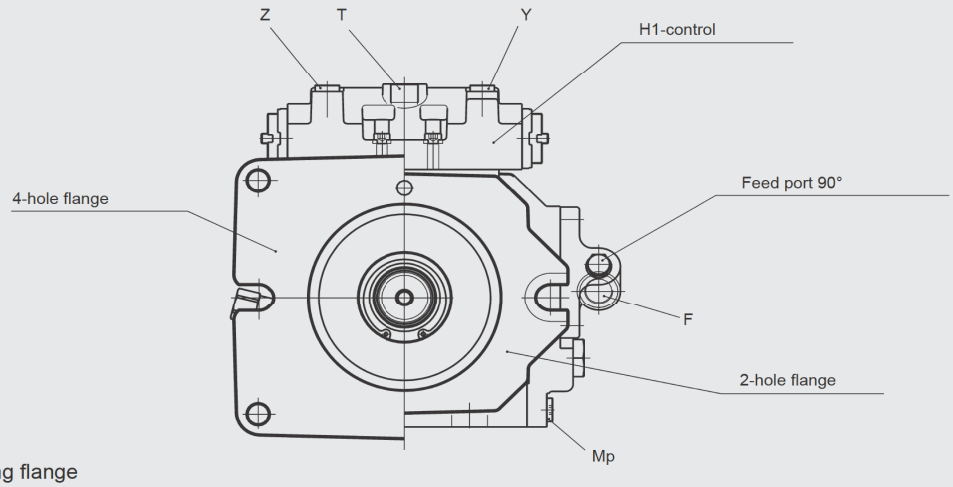

- 2-hole mounting flange
  with 4 additional threads
- 2-hole mounting flange
- H1-control
- Feed port 90°

Knowledge is POWER – Motion Force Control is our Business
HYQUIP Limited New Brunswick Street Horwich Bolton Lancashire BL6 7JB UK

5.6 Single pump PPV200

The following specifications enable the maximum external dimensions to be determined approximately and quickly. The actual installation dimensions for the particular unit should be taken from the installation drawing. The calculation of the external dimensions is performed by simple addition of the relevant individual dimensions.

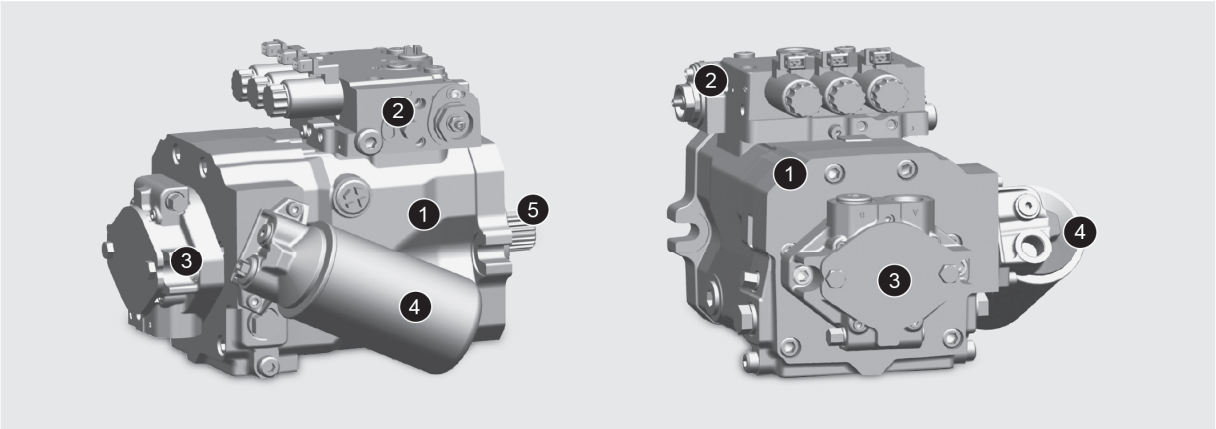

Component	Design	Length [mm]	Width [mm]	Height [mm]
1 - Basic unit	55 cm³/rev.	230	210	185
	75 cm³/rev.	245	235	190
	105 cm³/rev.	270	235	210
	135 cm³/rev.	290	280	220
	165 cm³/rev.	320	270	245
	210 cm³/rev.	350	290	275
	280 cm³/rev.	395	315	305
2 - Controller	M1R	–	10	95
	M2E	–	22	105
	H1	–	5	55
	H1P	–	10	75
	CA / CAF	–	135	95
	E1 / E5	–	5	110
	E1P	–	10	110
	E2	–	15	110
3 - Gear pump	16 cm³/rev.	60	–	–
	22.5 cm³/rev.	65	–	–
	31 cm³/rev.	135	–	–
	38 cm³/rev.	175	–	–
	44 cm³/rev.	180	–	–
4 - Filter	No. 2	10 (if without 3 - gear pump)	95	–
	No. 3		105	–
	F-port 90°	15	50	–
5 - Coupling flange Not shown		75	–	–
6 - Intermediate flange Shown at 5.8	55 → SAE C	47.5		
	75 → SAE C	47.5		
	105 → SAE C	37.5		
	135 → SAE C / D	31 / 50		
	165 → SAE C / D	26 / 61.5		
	210 → SAE C / D / E	32 / 68 / 55		
	280 → SAE C / D / E	45.5 / 39 / 39		

Knowledge is POWER – Motion Force Control is our Business
HYQUIP Limited New Brunswick Street Horwich Bolton Lancashire BL6 7JB UK

5.7 Suction and pressure port

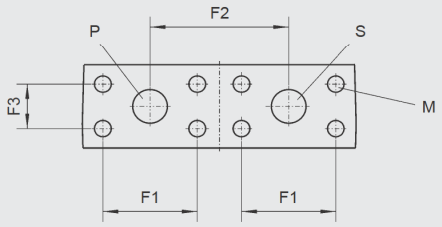

Nominal size pumps	55	75	105	135	165	210	280
F1 [mm]	50.8	57.2		66.6		79.3	
F2 [mm]	74	84		102		116	
F3 [mm]	23.8	27.8		31.8		36.5	
P, S	¾"	1"		1¼"		1½"	
M	M10	M12		M14		M16	

Knowledge is POWER – Motion Force Control is our Business
HYQUIP Limited New Brunswick Street Horwich Bolton Lancashire BL6 7JB UK

5.8 Tandem pumps PPV200

The following specifications enable the length of a PPV200 pump combination to be determined approximately and quickly. The respective larger pump assembly size must be installed before the respective smaller pump assembly size. At equal pump assembly size, the pump with the greater performance must be installed before the pump with a lower performance. Positioning the charge pump(s) at the end of the tandem pump results in optimum compactness, performance distribution and weight distribution.

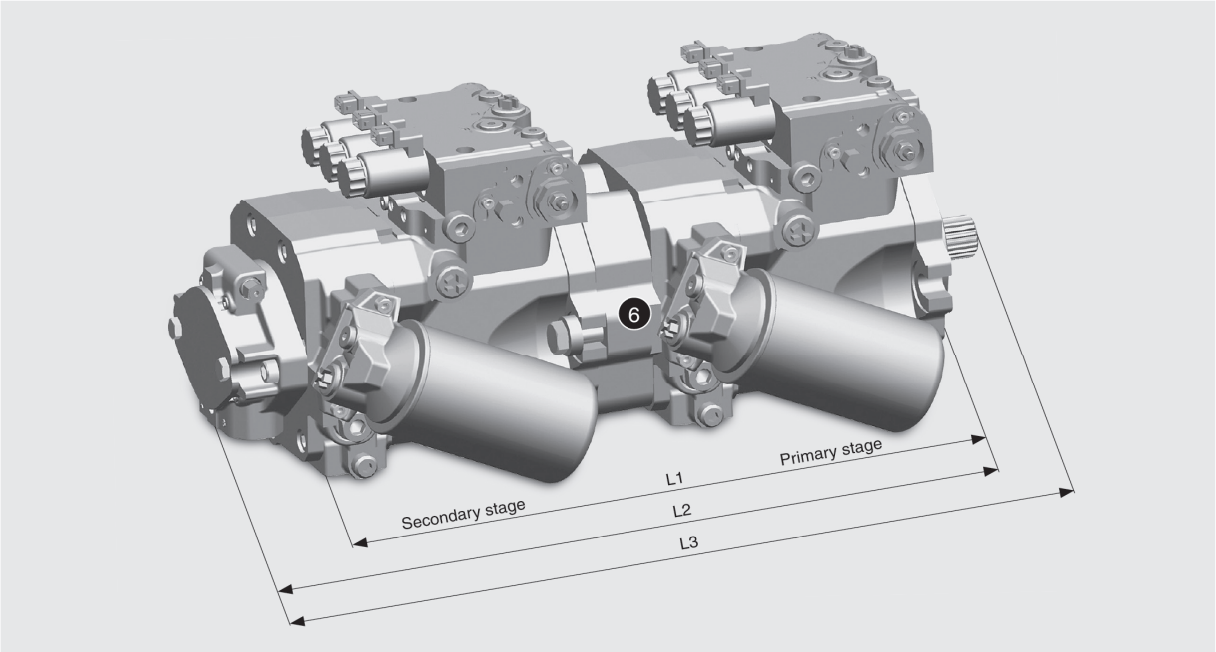

Secondary stage \ Primary stage		PPV200-55 (PGI 16 cm³/rev on secondary stage)	PPV200-75 (PGI 22.5 cm³/rev on - secondary stage)	PPV200-105 (PGI 22.5 cm³/rev on - secondary stage)	PPV200-135 (PGI 22.5 cm³/rev on - secondary stage)	PPV200-165 (PGE 38 cm³/rev on secondary stage)	PPV200-210 (PGE 38 cm³/rev on secondary stage)	PPV200-280 (PGE 44 cm³/rev on secondary stage)
PPV200-55	L1 [mm]	496	513	529	543	571	610	655
	L2 [mm]	553	575	591	605	746	782	834
	L3 [mm]	607	631	647	680	820	857	909
PPV200-75	L1 [mm]	–	530	546	560	588	627	672
	L2 [mm]	–	592	608	622	763	799	851
	L3 [mm]	–	648	663	696	837	874	925
PPV200-105	L1 [mm]	–	–	572	586	613	653	698
	L2 [mm]	–	–	634	648	788	825	877
	L3 [mm]	–	–	586	722	865	900	951
PPV200-135	L1 [mm]	–	–	–	640	670	702	723
	L2 [mm]	–	–	–	702	844	874	903
	L3 [mm]	–	–	–	777	919	947	978
PPV200-165	L1 [mm]	–	–	–	–	684	722	755
	L2 [mm]	–	–	–	–	859	897	935
	L3 [mm]	–	–	–	–	934	971	1,009
PPV200-210	L1 [mm]	–	–	–	–	–	731	777
	L2 [mm]	–	–	–	–	–	903	956
	L3 [mm]	–	–	–	–	–	978	1,030
PPV200-280	L1 [mm]	–	–	–	–	–	–	823
	L2 [mm]	–	–	–	–	–	–	1,002
	L3 [mm]	–	–	–	–	–	–	1,076

Knowledge is POWER – Motion Force Control is our Business
HYQUIP Limited New Brunswick Street Horwich Bolton Lancashire BL6 7JB UK

+44 (0)1204 699959
enquiries@hyquip.co.uk
hyquip.co.uk

NOTES

+44 (0)1204 699959
enquiries@hyquip.co.uk
hyquip.co.uk

NOTES

+44 (0)1204 699959
enquiries@hyquip.co.uk
hyquip.co.uk

NOTES

HYQUIP

+44 (0)1204 699959
enquiries@hyquip.co.uk
hyquip.co.uk

Accumulators 30.000

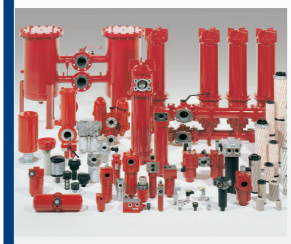
Filter Technology 70.000

Process Technology 77.000

Filter Systems 79.000

Compact Hydraulics 53.000

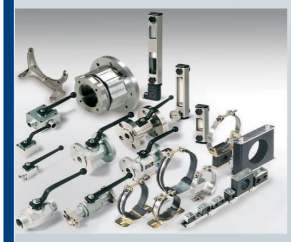
Accessories 61.000

Electronics 180.000

Cooling Systems 57.000

Global Presence.
Local Expertise.
www.hydac.com

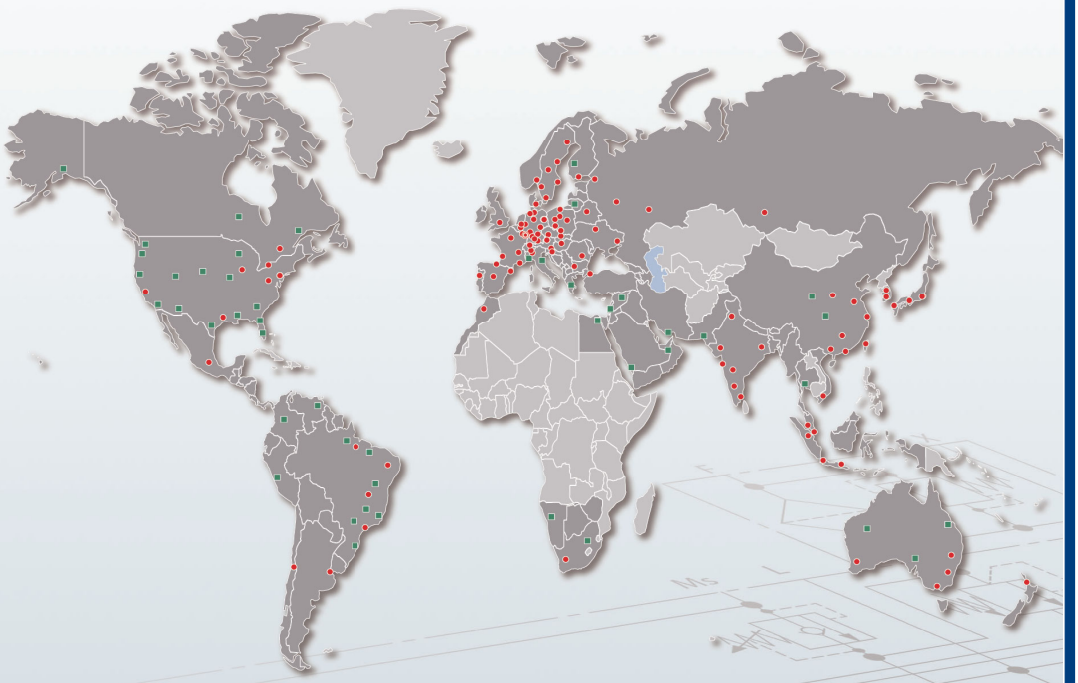

- HYDAC Head Office
- HYDAC Companies
- HYDAC Sales and Service Partners

HYDAC INTERNATIONAL

HYDAC INTERNATIONAL GMBH

EN 2.915.0/11.17

Knowledge is POWER – Motion Force Control is our Business

HYQUIP Limited New Brunswick Street Horwich Bolton Lancashire BL6 7JB UK