Hose Adaptors HA - G

Hose adaptors as per BS 5200
Male threads -----
BSPP (G) as per - ISO 228

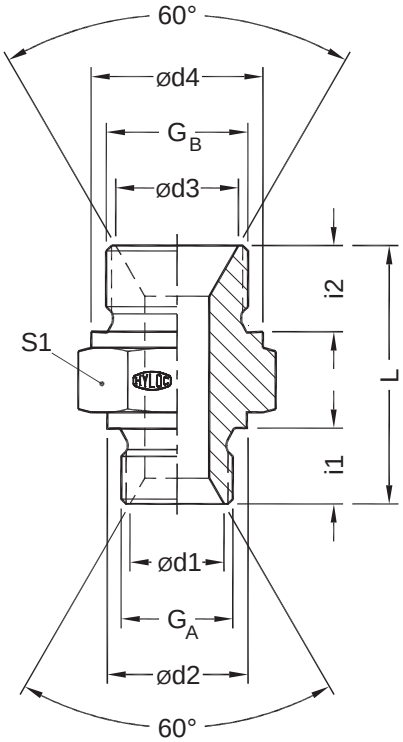

Part No.	G_A	G_B	Ød1	Ød2	Ød3	Ød4	i 1	i 2	L	S1
HAG01G01	G 1/8	G 1/8	7.5	14	7.5	14	8	8	26.0	14
HAG01G02	G 1/8	G 1/4	7.5	14	10.4	18	8	11	29.5	19
HAG01G03	G 1/8	G 3/8	7.5	14	14	22	8	12	31.0	22
HAG02G02	G 1/4	G 1/4	10.4	18	10.4	18	11	11	33.0	19
HAG02G03	G 1/4	G 3/8	10.4	18	14.0	22	11	12	36.5	22
HAG02G04	G 1/4	G 1/2	10.4	18	17.5	26	11	14	39.0	27
HAG03G03	G 3/8	G 3/8	14.0	22	14.0	22	12	12	38.0	22
HAG03G04	G 3/8	G 1/2	14.0	22	17.5	26	12	14	40.5	27
HAG03G06	G 3/8	G 3/4	14.0	22	22.9	32	12	16	44.5	32
HAG04G04	G 1/2	G 1/2	17.5	26	17.5	26	14	14	43.0	27
HAG04G06	G 1/2	G 3/4	17.5	26	22.9	32	14	16	47.0	32
HAG04G08	G 1/2	G 1	17.5	26	28.7	39	14	19	50.0	41

Dimensions in mm

DIN Fittings

Hose Adaptors HA - G

Hose adaptors as per BS 5200
Male threads -----
BSPP (G) as per - ISO 228

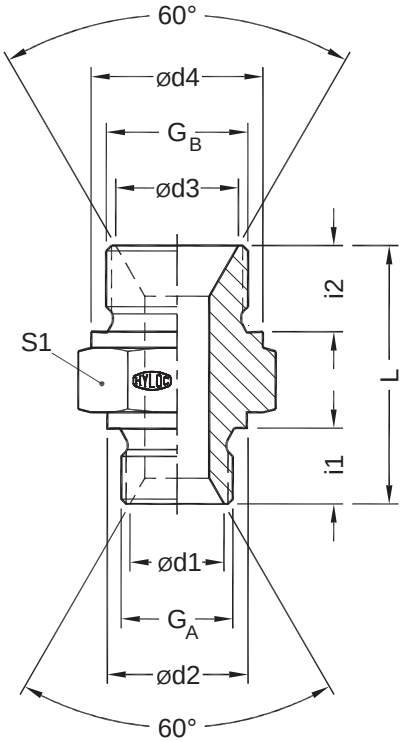

Download 2D CAD Drawing

Download 3D CAD Drawing

Available from our e-shop

Part No.	G_A	G_B	Ød1	Ød2	Ød3	Ød4	i 1	i 2	L	S1
HAG06G06	G 3/4	G 3/4	22.9	32	22.9	32	16	16	49.0	32
HAG06G08	G 3/4	G 1	22.9	32	28.7	39	16	19	52.0	41
HAG06G10	G 3/4	G 1.1/4	22.9	32	36.8	49	16	20	57.0	50
HAG08G08	G 1	G 1	28.7	39	28.7	39	19	19	55.0	41
HAG08G10	G 1	G 1.1/4	28.7	39	36.8	49	19	20	60.0	50
HAG08G12	G 1	G 1.1/2	28.7	39	42.7	55	19	22	63.0	55
HAG10G10	G 1.1/4	G 1.1/4	36.8	49	36.8	49	20	20	61.0	50
HAG10G12	G 1.1/4	G 1.1/2	36.8	49	42.7	55	20	22	64.0	55
HAG10G16	G 1.1/4	G 2	36.8	49	54.6	68	20	25	70.5	70
HAG12G12	G 1.1/2	G 1.1/2	42.7	55	42.7	55	22	22	66.0	55
HAG12G16	G 1.1/2	G 2	42.7	55	54.6	68	22	25	72.5	70
HAG16G16	G 2	G 2	54.6	68	54.6	68	25	25	76	70

Dimensions in mm

DIN Fittings