HYQUIP
+44 (0)1204 699959
enquiries@hyquip.co.uk
hyquip.co.uk

RE 10093/2023-03-16
Replaces: 2019-09-27

rexroth
A Bosch Company

External gear pump High Performance AZPG

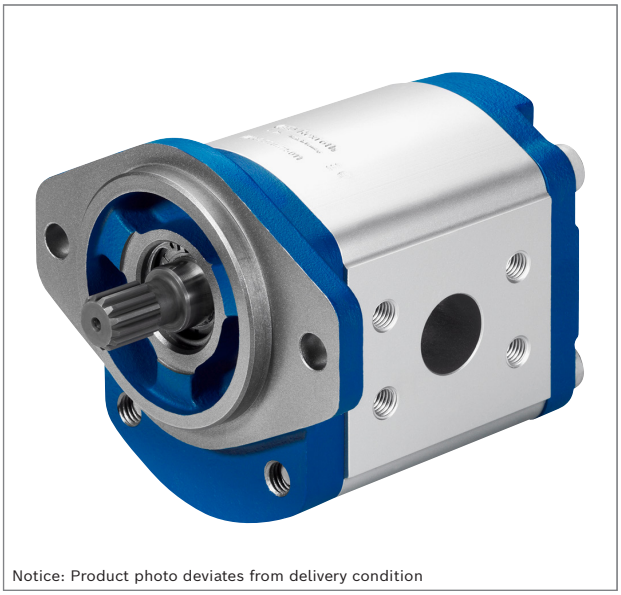

Notice: Product photo deviates from delivery condition

- Platform G
- Fixed displacement
- Nominal size 22 to 100
- Continuous pressure up to 250 bar
- Intermittent pressure up to 280 bar

Features

- Consistently high quality due to high-volume series production
- Long service life
- Slide bearings for high loading
- Drive shafts conforming to ISO or SAE and customer-specific solutions
- Port connections: Connection flanges or screw-in threads
- Combinations of several pumps possible

Contents

Product description	2
Type code	4
Technical data	8
Hydraulic fluid	10
Drive	11
Maximum transferable drive torques	12
Multiple gear pumps	13
Flow characteristic curves	14
Power diagrams	14
Noise charts	17
Drive shafts	19
Front covers	20
Port connections	21
Dimensions – Preferred program	22
Project planning information	56
Information	57
Accessories	58

RE 10093/2023-03-16, Bosch Rexroth AG.

Knowledge is POWER – Motion Force Control is our Business
HYQUIP Limited New Brunswick Street Horwich Bolton Lancashire BL6 7JB UK

HYQUIP
+44 (0)1204 699959
enquiries@hyquip.co.uk
hyquip.co.uk

Product description

General information

It is the central task of external gear pumps to convert mechanical energy (torque and speed) into hydraulic energy (flow and pressure). To reduce heat losses, Rexroth's external gear units offer very high efficiencies. They are realized by pressure-dependent gap sealing and highly precise production technology.
Rexroth external gear pumps are built in four frame sizes: Platform B, F, N and G. Within each platform different sizes can be realized by different gear widths. The pumps are available in the versions Standard, High Performance, SILENCE und SILENCE PLUS. Further configuration variants are given by different flanges, ports, shafts, valve arrangements and multiple pump combinations.

Pumping principle

Due to the teeth moving apart during the rotation from the tooth mesh, the gear chambers become clear. The resulting negative pressure as well as the atmospheric pressure on the hydraulic fluid level in the reservoir cause hydraulic fluid to flow from the reservoir to the pump. This hydraulic fluid fills the gear chambers and is transported in them in the direction of the arrow (see sectional drawing) along the housing from the suction side to the pressure side. The teeth mesh again then, force the hydraulic fluid out of the gear chambers and prevent it from flowing back to the suction chamber.

Construction

The external gear pump consists essentially of a pair of gear wheels supported in bearing bushings and the housing with a front cover and a rear cover.
The drive shaft protrudes from the front cover where it is usually sealed by the shaft seal. The bearing forces are absorbed by slide bearings. These bearings were designed for high pressures and have excellent emergency running properties, especially at low rotational speeds.
The gear wheels have 12 teeth. This keeps both flow pulsation and noise emission to a minimum. The sealing of the pressure chambers is achieved by forces depending on the working pressure. This ensures optimum efficiency.
The working pressure generated in the gear chambers is transferred to the outside of the bearing bushings in specifically designed pressure fields in such a way that they are pressed against the gears and seal them up. The pressurized compression areas are limited by special seals.
The seal in the area between the gear teeth and the housing is ensured by the smallest of gaps that are set depending on the pressure between the gear teeth and housing.

▼ **Axial and radial sealing of gear chambers**

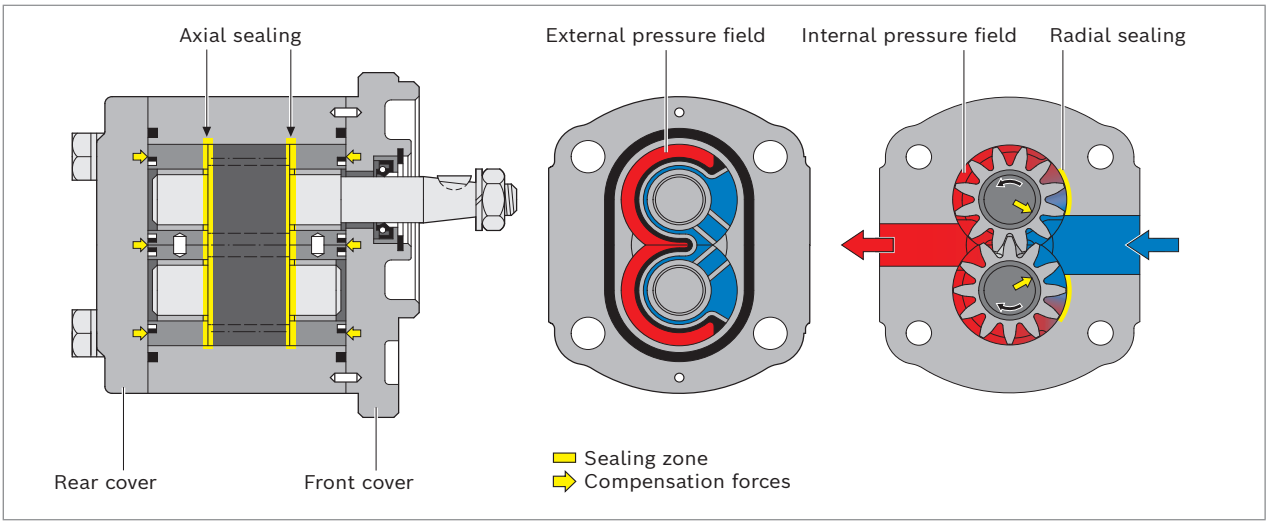

Knowledge is POWER – Motion Force Control is our Business
HYQUIP Limited New Brunswick Street Horwich Bolton Lancashire BL6 7JB UK

▼ **Pumping principle of High Performance pump**

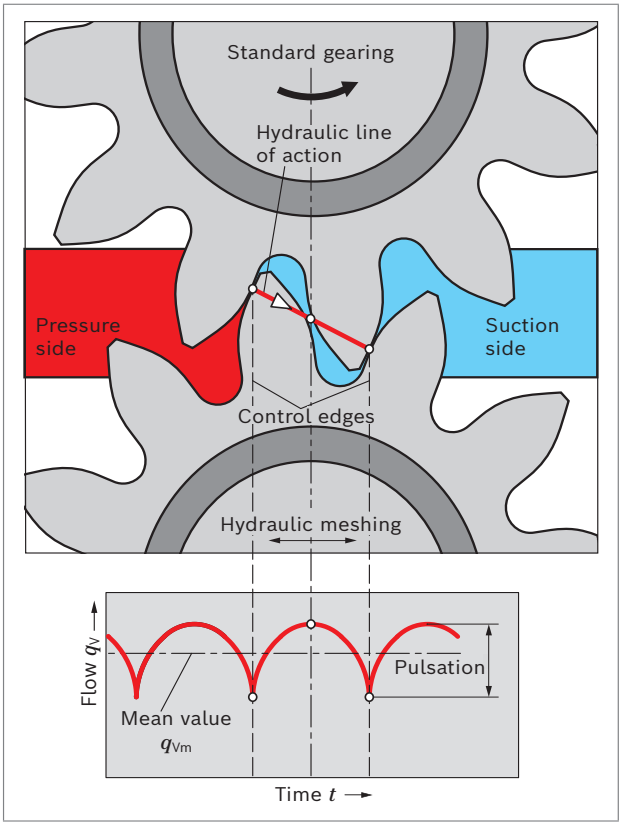

▼ **Principle design of external gear pump**

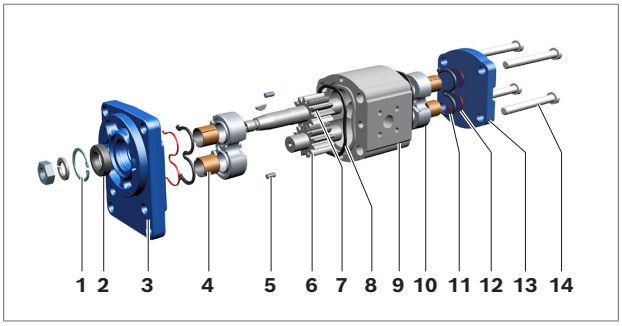

1	Retaining ring	**8**	Housing seal ring
2	Shaft seal	**9**	Pump housing
3	Front cover	**10**	Bearing bushing
4	Slide bearings	**11**	Axial field seal
5	Centering pin	**12**	Supporting element
6	Gear wheel	**13**	Rear cover
7	Drive shaft	**14**	Torx screws

Knowledge is POWER – Motion Force Control is our Business
HYQUIP Limited New Brunswick Street Horwich Bolton Lancashire BL6 7JB UK

HYQUIP
+44 (0)1204 699959
enquiries@hyquip.co.uk
hyquip.co.uk

Type code

Type code single pump

01	02	03		04	05		06	07	08	09	10	11	12		13
AZ	**P**	**G**	**–**	**2**	**2**	**–**								**–**	

Product

01	External gear unit	**AZ**

Function

02	Pump	**P**

Model

03	High Performance, platform G (22.5 ... 100 cm³/rev)	**G**

Series

04	Bearing diameter 26 mm	**2**

Version

05	Zinc plated, high precision cover fixation[1)]	**2**

Nominal size (NG)

06	Geometric displacement V_g [cm³/rev], see “Technical data”	**022**	**025**	**028**	**032**	**036**	**040**	**045**	**050**	**056**	**063**	**070**	**080**	**100**

Direction of rotation

07	Viewed on drive shaft	clockwise	**R**
		counter-clockwise	**L**

Drive shaft			**Typical front cover**	
08	Tapered keyed shaft	1 : 5	B	**C**
		1 : 8	O	**H**
	Splined shaft	SAE J744 22-4 13T	C	**D**
		SAE J744 25-4 15T	C	**E**
	Parallel keyed shaft	SAE J744 22-1	C	**Q**

Front cover

09	Rectangular flange	spigot dia. 105 mm		**B**
	Rectangular flange	spigot dia. 50.78 mm		**O**
	2-bolt flange	spigot dia. 101.6 mm	SAE J744 101-2 B	**C**

Port connection

10	SAE flange connection acc. to ISO 6162-1 with metric thread		**07**
	SAE flange connection acc. to ISO 6162-1 with UNC thread		**15**
	Square flange (German version)		**20**
	Square flange (Italian version)		**30**
	UN-thread acc. to ISO 11926-1/ASME B 1.1, O-ring		**12**

Sealing material

11	NBR (nitrile rubber)	**M**
	FKM (fluorocarbon rubber)	**P**
	NBR (nitrile rubber), shaft seal in FKM (fluorocarbon rubber)	**K**

Rear cover

12	With axial pressure and suction port	**A**
	Standard (cast iron)	**B**

1) Corrosion-protected version, details see “Technical data“

Bosch Rexroth AG., RE 10093/2023-03-16

HYQUIP
+44 (0)1204 699959
enquiries@hyquip.co.uk
hyquip.co.uk

01	02	03		04	05		06	07	08	09	10	11	12		13
AZ	**P**	**G**	**–**	**2**	**2**	**–**								**–**	

Non standard version

13	Special version[1] (characteristics not covered by type code)	**SXXXX**

Notice

- Not all of the variants according to the type code are possible.
- Please select the desired pump with the help of the selection table (preferred types) or after consultation with Bosch Rexroth.
- Special options are available on request.

1) For more information about special version, please contact us.

Knowledge is POWER – Motion Force Control is our Business
HYQUIP Limited New Brunswick Street Horwich Bolton Lancashire BL6 7JB UK

HYQUIP
+44 (0)1204 699959
enquiries@hyquip.co.uk
hyquip.co.uk

Type code multiple pump

01	02	03		04	05		06	07	08	09	10	11	12		13
AZ	**P**		**–**			**–**								**–**	

Product

01	External gear unit	**AZ**

Function

02	Pump	**P**

Model[1)]

03	Standard Performance	4.0 ... 25 cm^3/rev	Data sheet 10090	**W**
	High Performance	1.0 ... 7.1 cm^3/rev	Data sheet 10088	**B**
		4.0 ... 28 cm^3/rev	Data sheet 10089	**F**
		22.5 ... 100 cm^3/rev	Data sheet 10093	**G**
	SILENCE	4.0 ... 28 cm^3/rev	Data sheet 10095	**S**
		22.5 ... 100 cm^3/rev	Data sheet 10098	**U**
	SILENCE PLUS	12.0 ... 28 cm^3/rev	Data sheet 10094	**J**

Series (according to data sheet of pump stage 1)

04	Bearing diameter 26 mm	**2**

Version (according to data sheet of pump stage 1)

05	Phosphated, pinned	**1**
	Corrosion-protected, pinned	**2**

Nominal size (NG)[2)]

06	In accordance with data sheet for the individual series	

Direction of rotation

07	Viewed on drive shaft	clockwise	**R**
		counter-clockwise	**L**

Drive shaft (according to pump stage1)

08	In accordance with data sheet of pump stage 1	

Front cover (according to pump stage1)

09	In accordance with data sheet of pump stage 1	

Port connection (per pump stage)[3)]

10	In accordance with data sheet for the individual series	

Sealing material

11	NBR (nitrile rubber)	**M**
	FKM (fluorocarbon rubber)	**P**
	NBR (nitrile rubber), shaft seal in FKM (fluorocarbon rubber)	**K**

Rear cover (according to last pump stage)

12	In accordance with data sheet of the last pump stage	

Non standard version

13	Special version (characteristics not covered by type code)	**SXXXX**

1) A letter is to be selected for each pump stage, e.g. triple pump AZPJ + AZPJ + AZPB: AZP**JJB**
2) A numerical value is to be selected for each pump stage, e.g. triple pump **028/016/2.0**
3) A numerical value is to be selected for each pump stage, e.g. triple pump **202020**

Bosch Rexroth AG., RE 10093/2023-03-16

HYQUIP
+44 (0)1204 699959
enquiries@hyquip.co.uk
hyquip.co.uk

Notice

- Not all of the variants according to the type code are possible.
- Please select the desired pump with the help of the selection table (preferred types) or after consultation with Bosch Rexroth.
- Special options are available on request.

Example triple pump:
AZPG...032... + AZPF...025... + AZPF...016...

01	02	03		04	05		06	07	08	09	10	11	12
AZ	**P**	**GFF**	**–**	**2**	**2**	**–**	**032/025/016**	**R**	**D**	**C**	**20202020**	**K**	**B**

RE 10093/2023-03-16, Bosch Rexroth AG.

HYQUIP
+44 (0)1204 699959
enquiries@hyquip.co.uk
hyquip.co.uk

Technical data

Operating conditions

Nominal size					22	25	28	32	36	40	45
Series					2x						
Displacement, geometric, per revolution			V_g	cm³	22.5	25	28	32	36	40	45
Pressure at suction port S[1]		absolute	p_e	bar	0.7 ... 3						
Maximum continuous pressure			p_1	bar	250	250	250	250	250	250	250
Maximum intermittent pressure[2]			p_2	bar	280	280	280	280	280	280	280
Maximum pressure peaks			p_3	bar	300	300	300	300	300	300	300
Minimum speed at	ν =12 mm²/s	p < 100 bar	n_{min}	rpm	500	500	500	500	500	500	500
		p = 100 ... 180 bar	n_{min}	rpm	1200	1200	1000	1000	1000	800	800
		p = 180 bar ... p_2	n_{min}	rpm	1400	1400	1400	1400	1200	1200	1000
	ν =25 mm²/s	at p_2	n_{min}	rpm	600	600	500	500	500	500	500
Maximum speed		at p_2	n_{max}	rpm	3000	3000	3000	2800	2800	2800	2600

Nominal size					50	56	63	70	80	100
Series					2x					
Displacement, geometric, per revolution			V_g	cm³	50	56	63	70	80	100
Pressure at suction port S[1]		absolute	p_e	bar	0.7 ... 3					
Maximum continuous pressure			p_1	bar	220	195	170	120	90	80
Maximum intermittent pressure[2]			p_2	bar	250	225	200	150	120	100
Maximum pressure peaks			p_3	bar	280	250	230	180	150	120
Minimum speed at	ν =12 mm²/s	p < 100 bar	n_{min}	rpm	500	500	500	500	500	500
		p = 100 ... 180 bar	n_{min}	rpm	800	800	800	800	800	800
		p = 180 bar ... p_2	n_{min}	rpm	1000	1000	1000	1000	1000	1000
	ν =25 mm²/s	at p_2	n_{min}	rpm	500	500	500	500	600	800
Maximum speed		at p_2	n_{max}	rpm	2600	2300	2300	2200	2000	1700

Rotary stiffness of drive shaft

Drive shaft			C	H	D	E	Q
Rotary stiffness	c	Nm/rad	1005	902	899	1186	917

General technical data

Weight	m	kg	See chapter “Dimensions”
Installation position			No restrictions
Mounting type			Flange or through-bolting with spigot
Port connections			See chapter “Port connections” on page 21
Direction of rotation, viewed on drive shaft			Clockwise or counter-clockwise, the pump may only be driven in the direction indicated
Drive shaft loading			Axial and radial forces only after consultation
Ambient temperature range	t	°C	-30 ... +80 with NBR seals (NBR = nitrile rubber)
			-20 ... +110 with FKM seals (FKM = fluorocarbon rubber)

Corrosion protection

Version 2 (galvanized, passivated): Unit with corrosion protection	Degree of corrosion and rust according to DIN EN ISO 9227	Test duration 96 h: no red rust

1) In the case of tandem pumps, the suction-side pressure difference between the individual pump stages must not exceed 0.5 bar.

2) Limited service life with threaded ports (applicable for applications with p_2 > 210 bar)

Knowledge is POWER – Motion Force Control is our Business
HYQUIP Limited New Brunswick Street Horwich Bolton Lancashire BL6 7JB UK

HYQUIP
+44 (0)1204 699959
enquiries@hyquip.co.uk
hyquip.co.uk

Notice

- Safety requirements pertaining to the whole systems are to be observed.
- Please contact us for applications with frequent load changes.

▼ **Pressure definition**

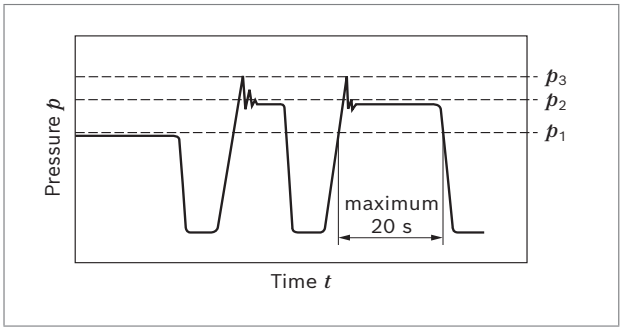

p_1: Maximum continuous pressure
p_2: Maximum intermittent pressure
p_3: Maximum pressure peaks

Determining the operating characteristics		
Flow	$q_v = \frac{V_g \times n \times \eta_v}{1000}$	[l/min]
Torque	$M = \frac{V_g \times \Delta p}{20 \times \pi \times \eta_{hm}}$	[Nm]
Power	$P = \frac{2\pi \times M \times n}{60000} = \frac{q_v \times \Delta p}{600 \times \eta_t}$	[kW]

Key

V_g	Displacement per revolution [cm³]
Δp	Differential pressure [bar] ($\Delta p = p - p_e$)
n	Rotational speed [rpm]
η_v	Volumetric efficiency
η_{hm}	Hydraulic-mechanical efficiency
η_t	Total efficiency ($\eta_t = \eta_v \times \eta_{hm}$)

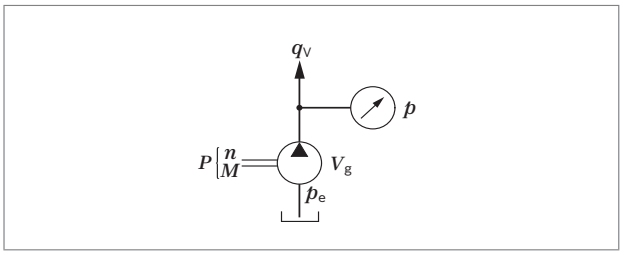

Notice

You can find diagrams for a rough calculation in chapter “Diagrams / Characteristic curves”.

Direction of rotation

The dimensional drawings in the chapter Dimensions represent pumps for clockwise rotation. The position of the drive shaft and/or the position of suction and pressure port changes for counter-clockwise rotation.

▼ **Direction of rotation, viewed on drive shaft**

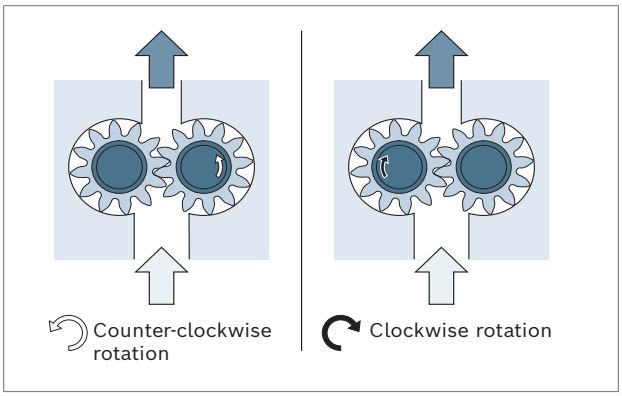

Knowledge is POWER – Motion Force Control is our Business
HYQUIP Limited New Brunswick Street Horwich Bolton Lancashire BL6 7JB UK

HYQUIP
+44 (0)1204 699959
enquiries@hyquip.co.uk
hyquip.co.uk

Hydraulic fluid

The external gear unit is designed for operation with HLP mineral oil according to DIN 51524, 1-3. Under higher load, however, Bosch Rexroth recommends at least HLP compliant with DIN 51524 Part 2.
See the following data sheet for application instructions and requirements for selecting hydraulic fluid, behavior during operation as well as disposal and environmental protection before you begin project planning:

- 90220: Hydraulic fluids based on mineral oils and related hydrocarbons

Other hydraulic fluids on request.

Selection of hydraulic fluid
Bosch Rexroth evaluates hydraulic fluids on the basis of the Fluid Rating according to the technical data sheet 90235.
Hydraulic fluids with positive evaluation in the Fluid Rating are provided in the following technical data sheet:

- 90245: Bosch Rexroth Fluid Rating List for Rexroth hydraulic components (pumps and motors)

Selection of hydraulic fluid shall make sure that the operating viscosity in the operating temperature range is within the optimum range (ν_{opt} see “Selection diagram”)

Viscosity and temperature of hydraulic fluids

Viscosity range	
Permissible in continuous operation	ν = 12 ... 800 mm²/s
Recommended in continuous operation	ν_{opt} = 20 ... 100 mm²/s
Permissible for cold start	ν_{max} ≤ 2000 mm²/s
Temperature range	
With NBR seals (NBR = nitrile rubber)	t = -30 °C ... +80 °C
With FKM seals (FKM = fluorocarbon rubber)	t = -20 °C ... +110 °C

▼ **Selection diagram**

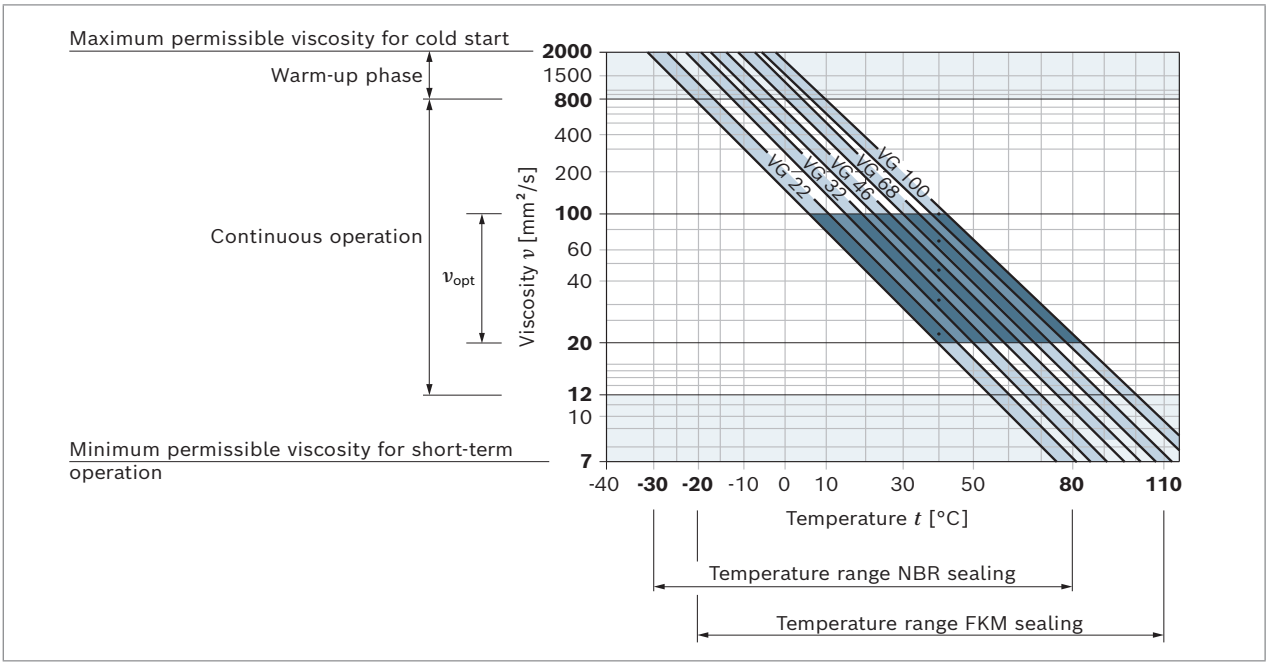

Observe the instructions for the filtration of the hydraulic fluid (see chapter “Project planning information”).

Knowledge is POWER – Motion Force Control is our Business
HYQUIP Limited New Brunswick Street Horwich Bolton Lancashire BL6 7JB UK

HYQUIP
+44 (0)1204 699959
enquiries@hyquip.co.uk
hyquip.co.uk

Drive

1. Elastic couplings

- The coupling may not transfer any radial or axial forces to the pump.
- The radial runout deviation from the shaft to the spigot should not exceed 0.2 mm.
- See the coupling manufacturer's assembly instructions for shaft misalignment tolerances.

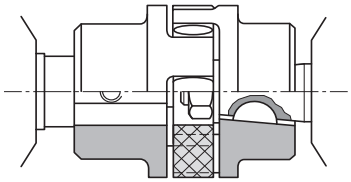

2. Coupling sleeve

- To be used for splined shaft profile according to DIN and SAE
- Attention: Make sure no radial or axial forces act on the pump drive shaft or coupling sleeve. The coupling sleeve should freely move in the axial direction.
- The distance between the pump drive shaft and the output shaft on the customer side should be 3.5+1.5 mm.
- Reserve installation space for the retaining ring.
- Oil-bath or oil-mist lubrication required

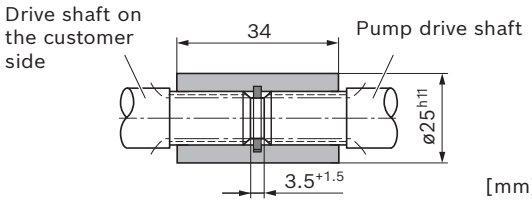

3. Tang drive coupling

- For attaching the pump directly to an electric motor or combustion engine, gearbox, etc.
- Pump drive shaft with special tang drive coupling and driver (**3**) (scope of delivery see offer drawing)
- No shaft seal
- Drive-side installation and sealing according to the following recommendations and dimensions
- Drive shaft on the customer side (**1**)
  - Case-hardened steel DIN EN 10084, e.g. 20MnCrS5 case-hardened 1.0 deep; HRA 83±2
  - Seal ring contact surface ground without rifling $R_t \leq 4$ µm
- Radial shaft seal ring on the customer side (**2**)
  - Provide with rubber cover (see DIN 3760, type AS, or double-lipped ring)
  - Provide installation edges with 15° chamfer or install shaft seal with protection sleeve

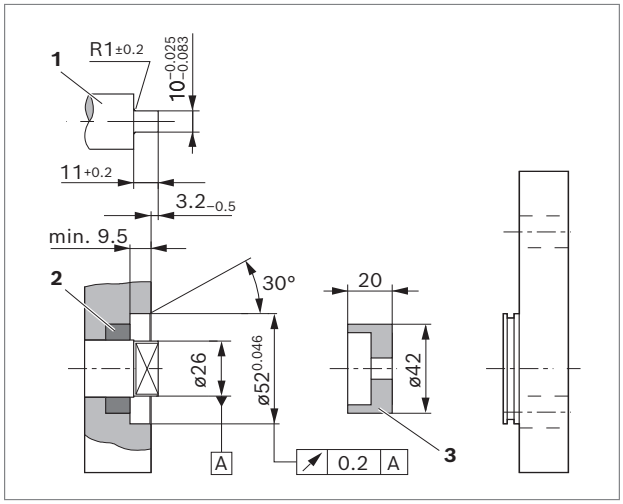

Knowledge is POWER – Motion Force Control is our Business
HYQUIP Limited New Brunswick Street Horwich Bolton Lancashire BL6 7JB UK

Maximum transferable drive torques

▼ **Tapered keyed shafts**

Drive shaft Code	Designation	M_{max} Nm	Nominal size	$p_{2\ max}$ bar
C	1 : 5	290	22...45	280
			50	250
			56	225
			63	200
			70	150
			80	120
			100	100
H	1 : 8	240	22...45	280
			50	250
			56	225
			63	200
			70	150
			80	120
			100	100

▼ **Splined shafts**

Drive shaft Code	Designation	M_{max} Nm	Nominal size	$p_{2\ max}$ bar
D	SAE J744 22-4 13T	320	22...45	280
			50	250
			56	225
			63	200
			70	150
			80	120
			100	100
E	SAE J744 25-4 15T	530	22...45	280
			50	250
			56	225
			63	200
			70	150
			80	120
			100	100

▼ **Parallel keyed shafts**

Drive shaft Code	Designation	M_{max} Nm	Nominal size	$p_{2\ max}$ bar
Q	SAE J744 22-1	250	22...36	280
			40	250
			45	225
			50	200
			56	180
			63	160
			70	140
			80	120
			100	100

Knowledge is POWER – Motion Force Control is our Business
HYQUIP Limited New Brunswick Street Horwich Bolton Lancashire BL6 7JB UK

HYQUIP
+44 (0)1204 699959
enquiries@hyquip.co.uk
hyquip.co.uk

Multiple gear pumps

Gear pumps are well-suited to multiple arrangements, whereby the drive shaft of the first pump stage is extended to a second and possibly third pump stage. The shaft of the individual pump sections are normally connected via a driver or via a splined coupling (reinforced through drive). The individual pump stages are usually hydraulically isolated and have separate suction ports. On request a common suction port or separated but hydraulically connected suction ports are available.
For the configuration of multiple pumps, Bosch Rexroth recommends arranging the pump stage with the largest displacement on the drive side.

Notice
Basically, the parameters of the single pumps apply, however certain restrictions need to be observed:
- **Maximum rotational speed:**
  This is determined by the largest pump stage used.
- **Pressures:**
  These are restricted by the maximum transmissible torques of the drive shaft, the through drive and the driver.

Addition of drive torques

Please note, that in multiple pump arrangements the drive torques of the individual pump stages will add up according to the following formula:

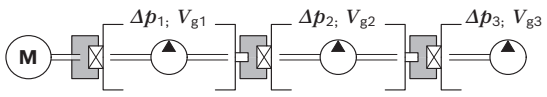

$$\frac{\Delta p_1 \times V_{g1} + \Delta p_2 \times V_{g2} + \Delta p_3 \times V_{g3}}{18 \times \pi} \leq M_{max}\ ^{1)}$$

Δp [bar]
V_g [cm³]

This may result in pressure restrictions for the respective pump stages.

Standard through drive (tang drive coupling)

For Platform G pumps, the driver for the next pump stage can support loads up to M_{max} = 130 Nm. This may result in pressure limitations for subsequent pump stages. Subsequent pumps of a smaller series determine the maximum transmissible torque.

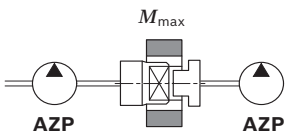

Following pump		M_{max} [Nm]
Platform G	AZPG	130
	AZPU	130
Platform F	AZPW	52
	AZPF-1x	65
	AZPF-2x	85
	AZPS-1x	65
	AZPS-2x	85
	AZPJ	65
Platform B	AZPB-3x	25

Reinforced through drive

Reinforced through drives (for up to M_{max} = 320 Nm) are available for applications with higher torques/torsional vibrations. Design available on request.

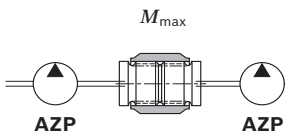

1) M_{max}: see table above “Maximum transferable drive torques”

Knowledge is POWER – Motion Force Control is our Business
HYQUIP Limited New Brunswick Street Horwich Bolton Lancashire BL6 7JB UK

Flow characteristic curves

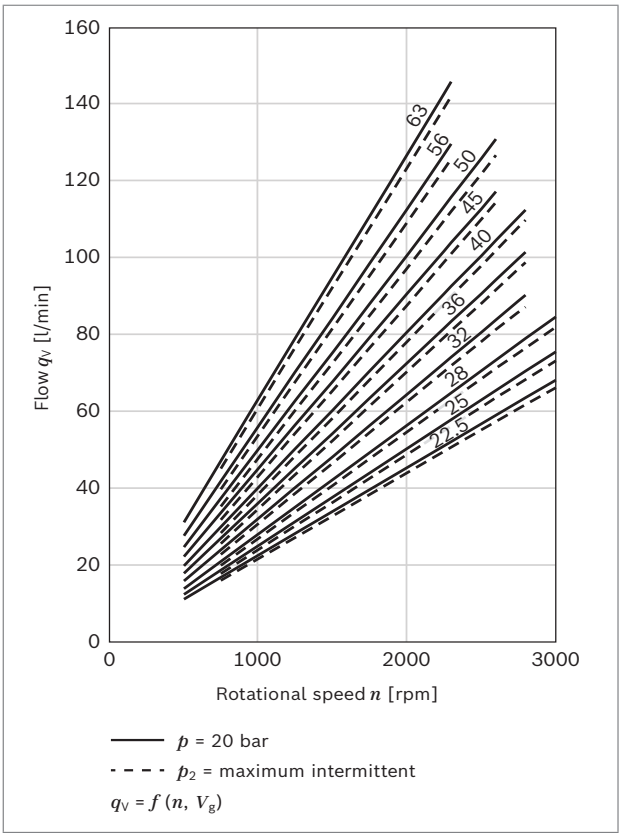

Notice

- Characteristic curves measured at ν = 32 mm²/s and t = 50 °C

Power diagrams

▼ **Nominal size 22**

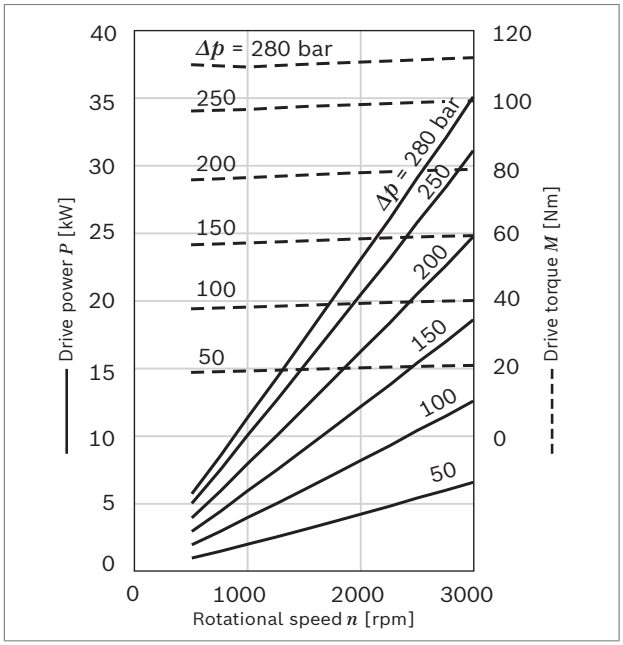

▼ **Nominal size 25**

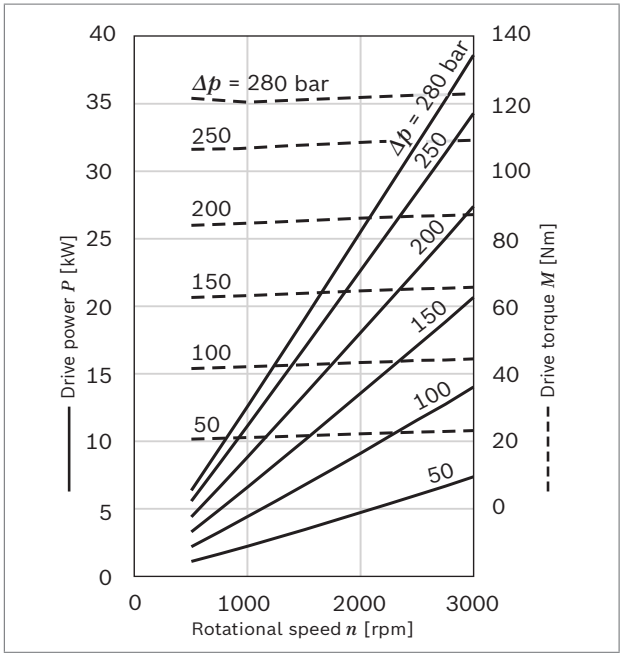

Knowledge is POWER – Motion Force Control is our Business
HYQUIP Limited New Brunswick Street Horwich Bolton Lancashire BL6 7JB UK

▼ **Nominal size 28**

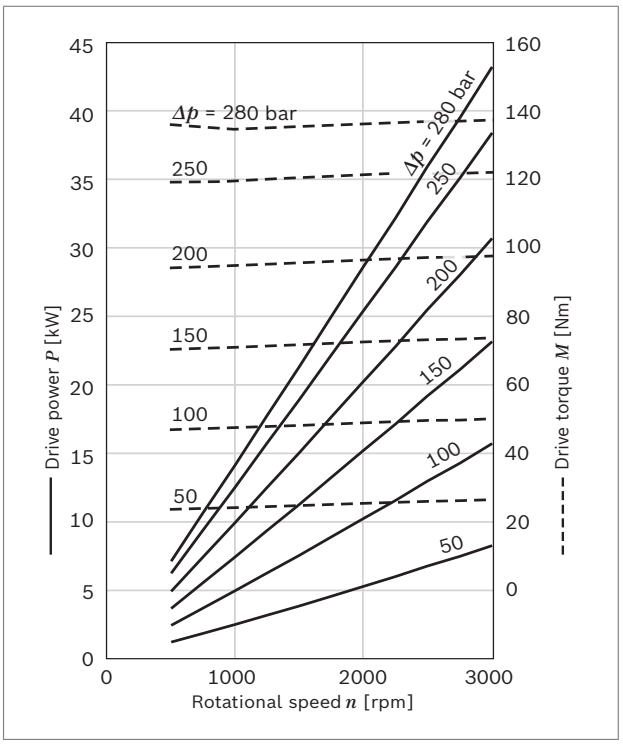

▼ **Nominal size 32**

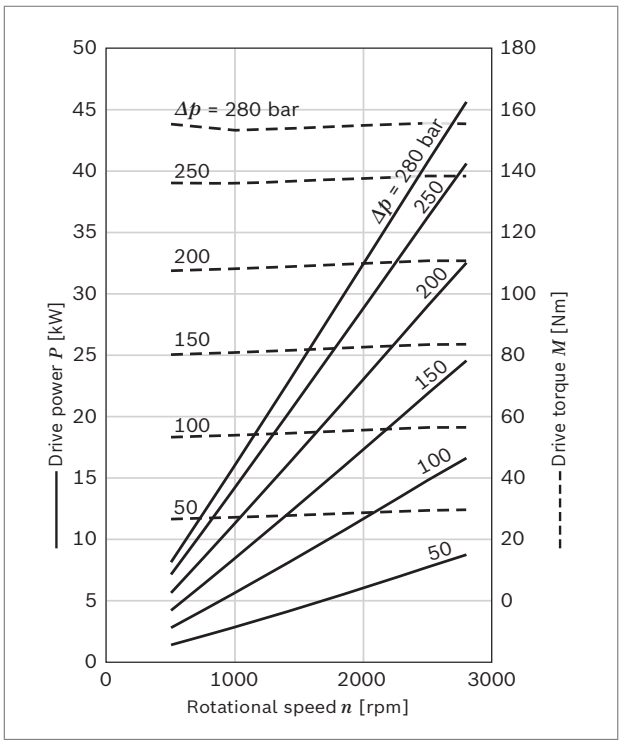

▼ **Nominal size 36**

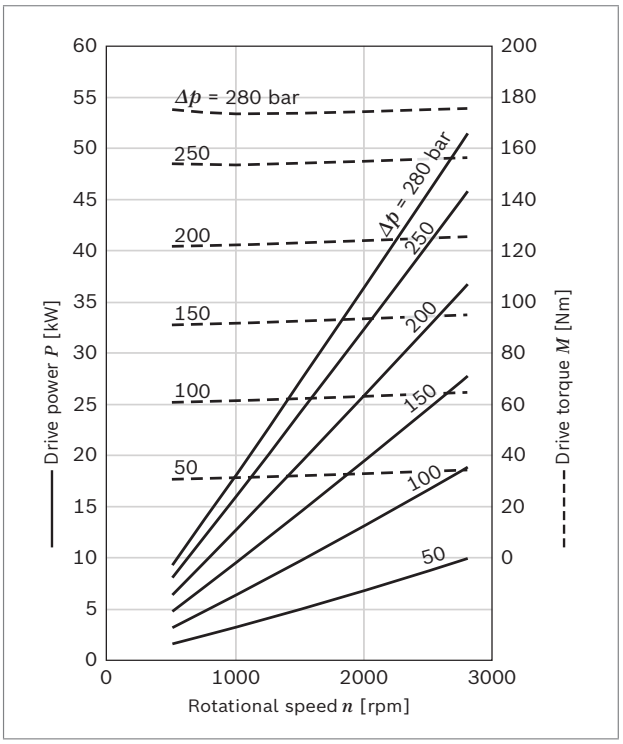

▼ **Nominal size 40**

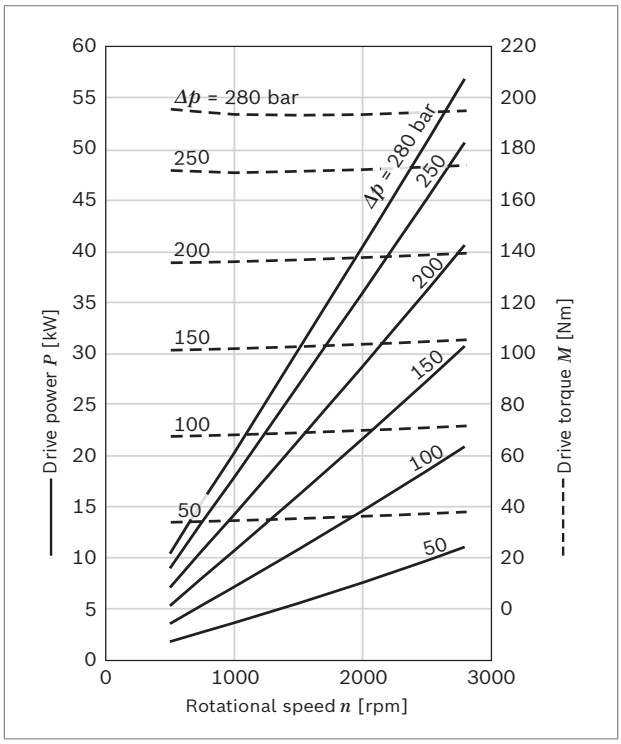

Knowledge is POWER – Motion Force Control is our Business
HYQUIP Limited New Brunswick Street Horwich Bolton Lancashire BL6 7JB UK

▼ **Nominal size 45**

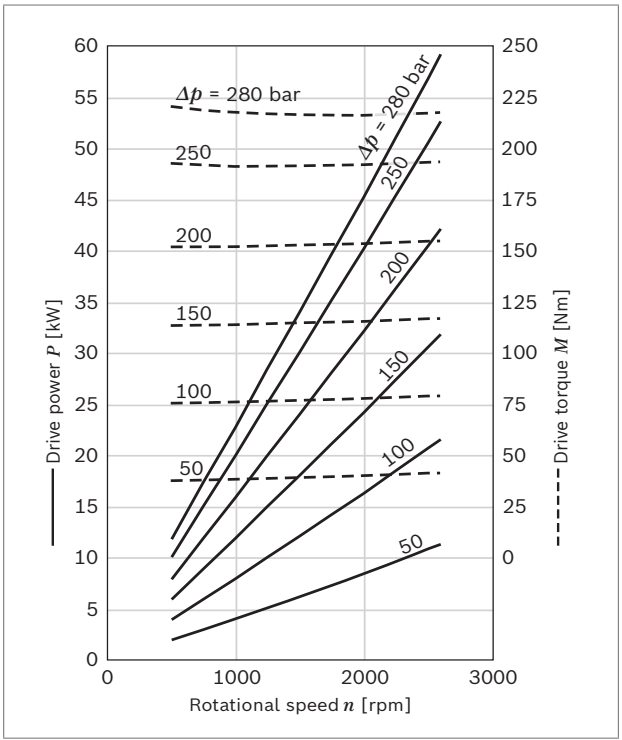

▼ **Nominal size 50**

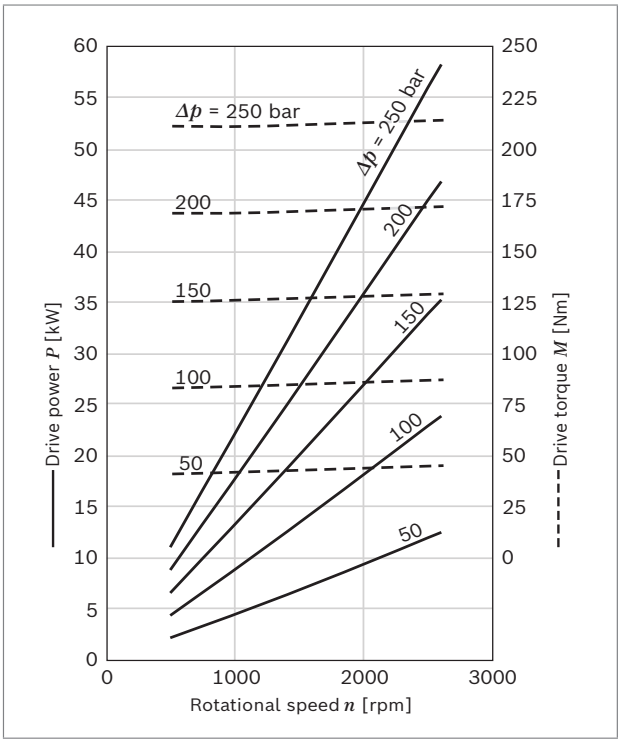

▼ **Nominal size 56**

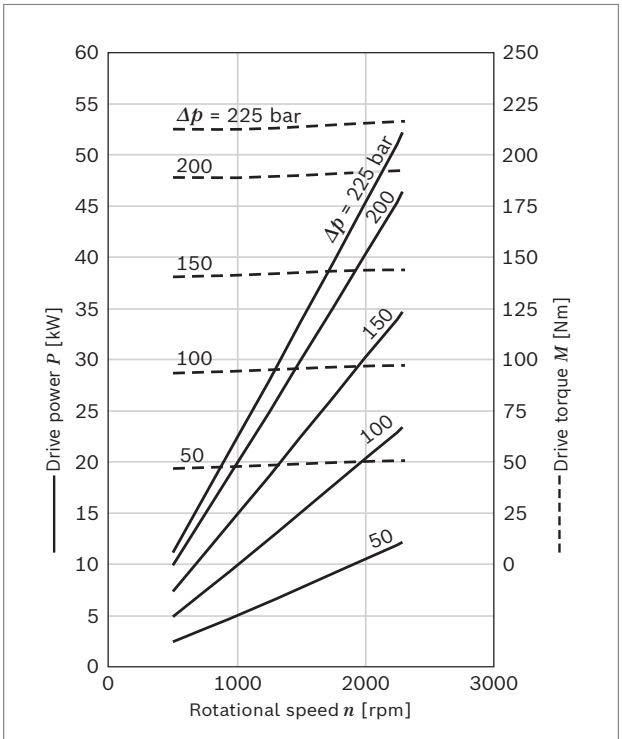

▼ **Nominal size 63**

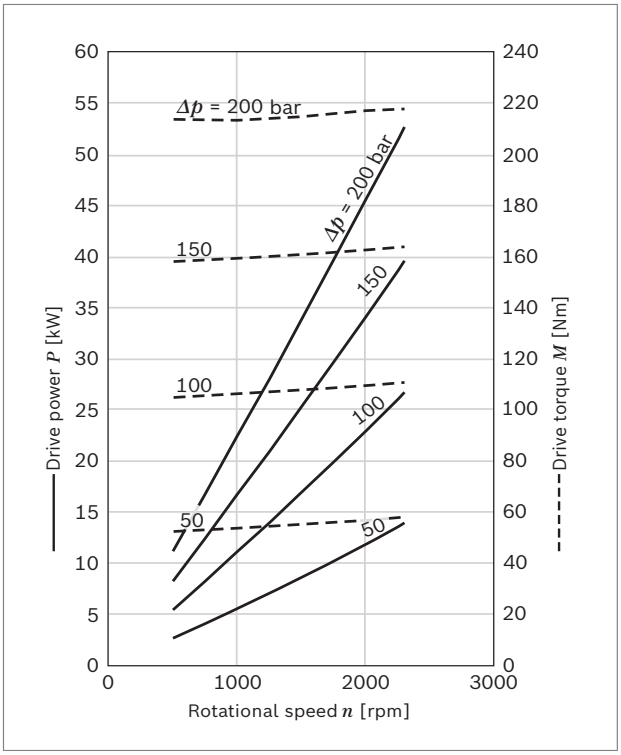

HYQUIP
+44 (0)1204 699959
enquiries@hyquip.co.uk
hyquip.co.uk

Noise charts

Noise levels dependent on the rotational speed, pressure range between 10 bar and pressure value p_2 (see chapter "Technical data").
These are typical characteristic values for the respective size. They describe the airborne sound emitted solely by the pump.
Ambient influences (installation site, piping, other system components) were not taken into account.
The values refer to one individual pump.

Notice

- Characteristic curves measured at ν = 32 mm²/s and t = 50 °C.
- Sound pressure level calculated from noise measurements made in the low reflection measuring room according to DIN 45635, Part 26.
- Distance from measuring sensor to pump: 1 m.

▼ **Nominal size 22**

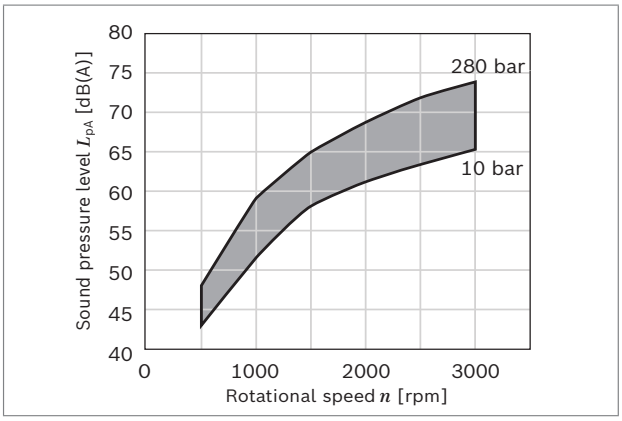

▼ **Nominal size 25**

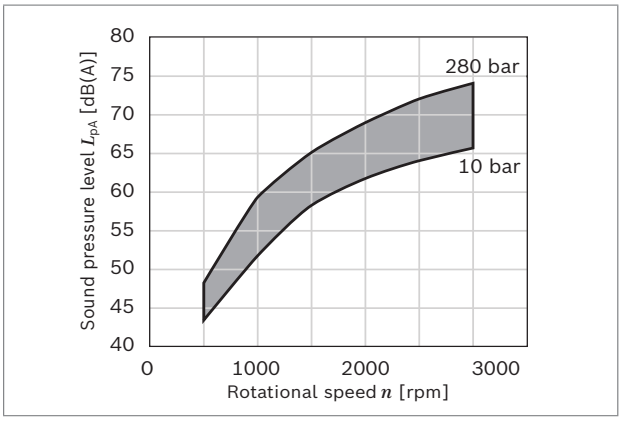

▼ **Nominal size 28**

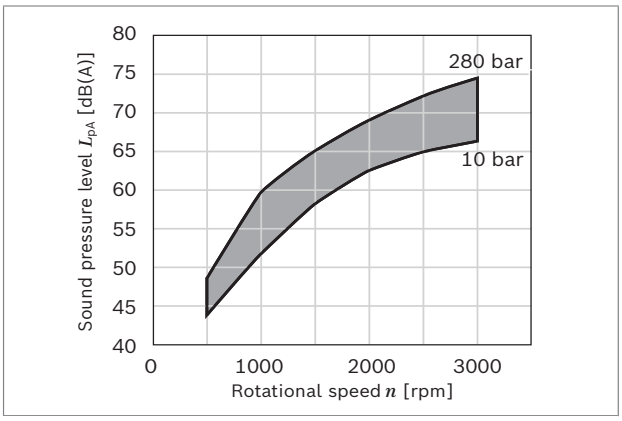

▼ **Nominal size 32**

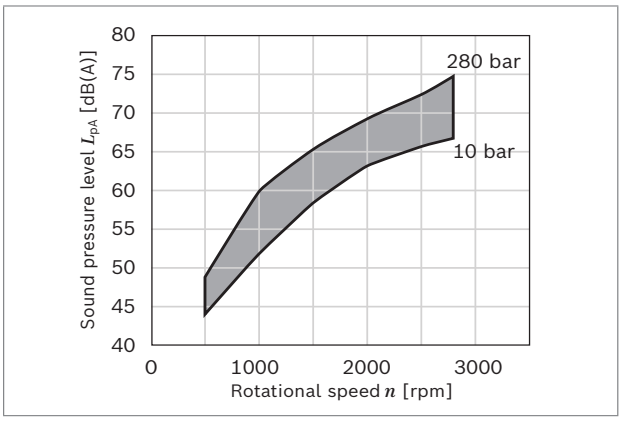

Knowledge is POWER – Motion Force Control is our Business
HYQUIP Limited New Brunswick Street Horwich Bolton Lancashire BL6 7JB UK

HYQUIP
+44 (0)1204 699959
enquiries@hyquip.co.uk
hyquip.co.uk

▼ **Nominal size 36**

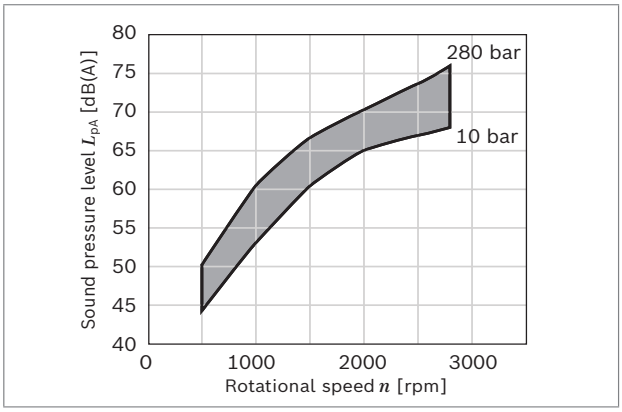

▼ **Nominal size 40**

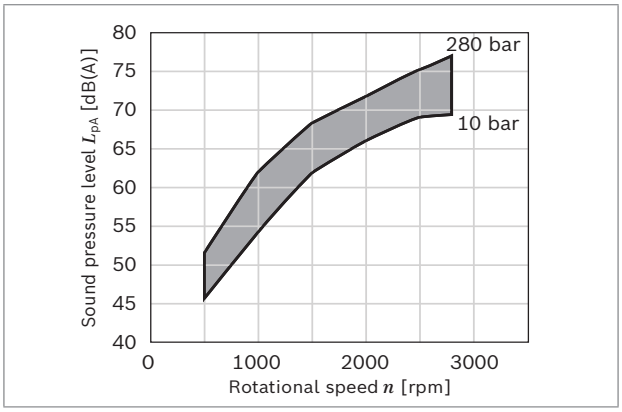

▼ **Nominal size 45**

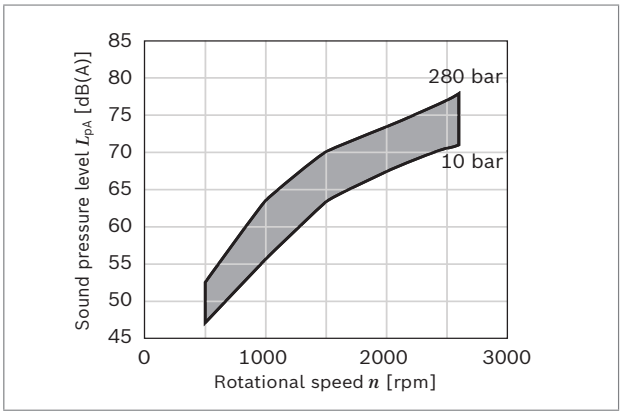

▼ **Nominal size 50**

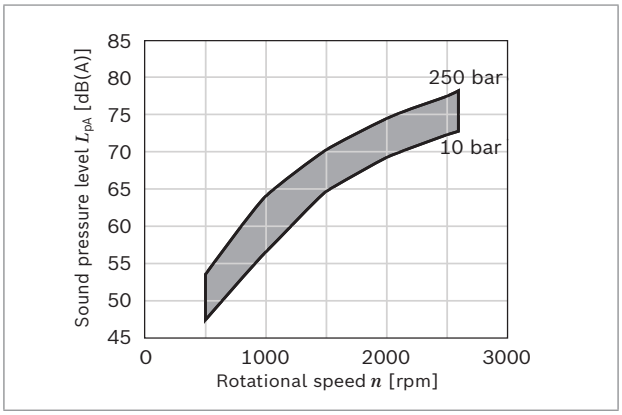

▼ **Nominal size 56**

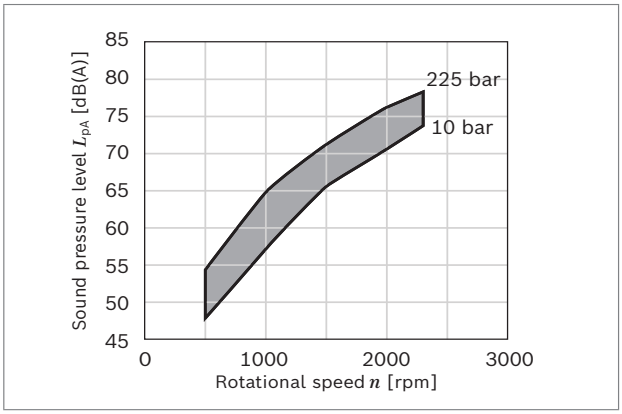

▼ **Nominal size 63**

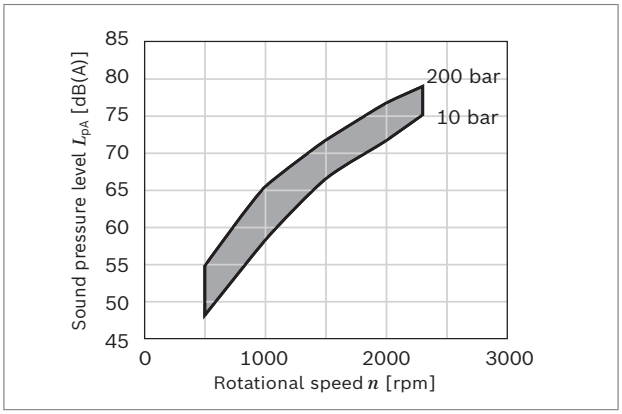

Knowledge is POWER – Motion Force Control is our Business
HYQUIP Limited New Brunswick Street Horwich Bolton Lancashire BL6 7JB UK

Drive shafts

▼ **Tapered keyed shaft 1:5**

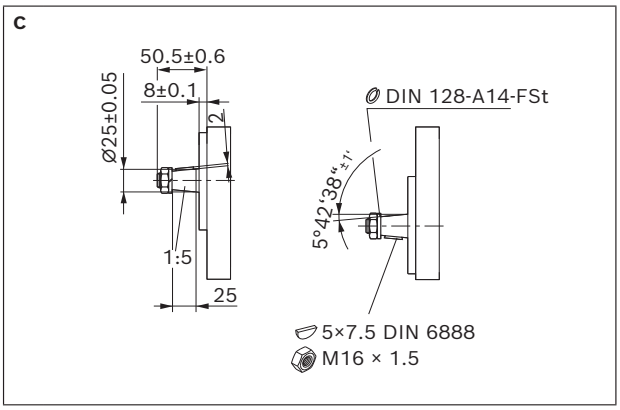

▼ **Tapered keyed shaft 1:8**

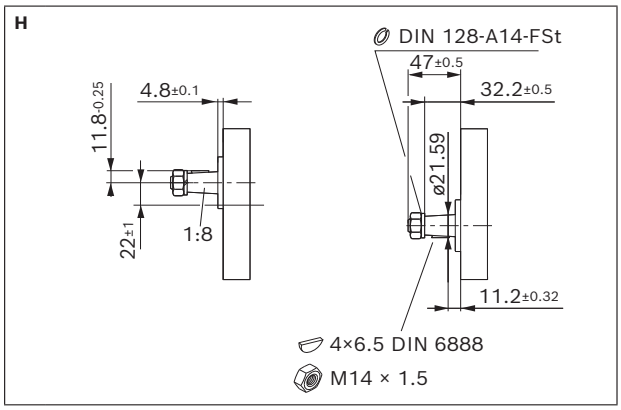

▼ **Splined shaft SAE J744 22-4 13T**

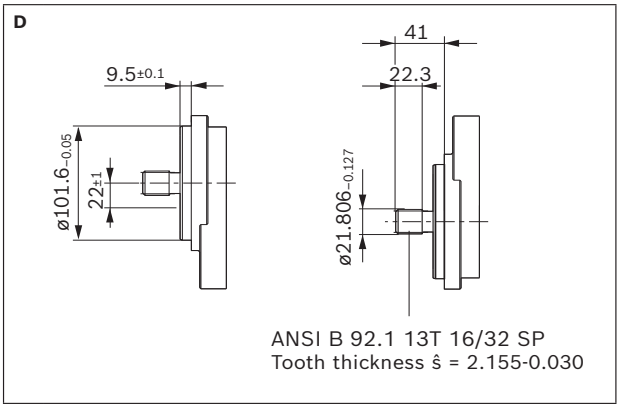

▼ **Splined shaft SAE J744 25-4 15T**

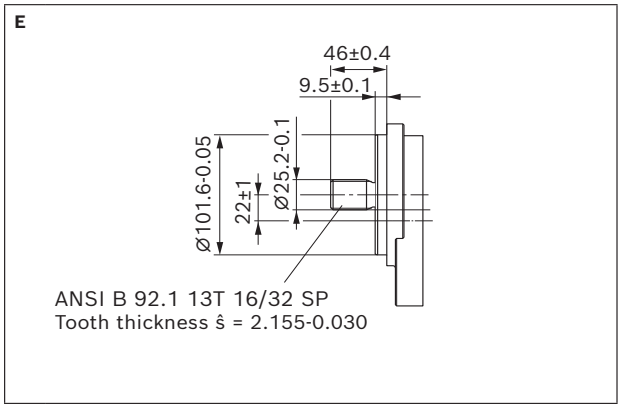

▼ **Parallel keyed shaft SAE J744 22-1**

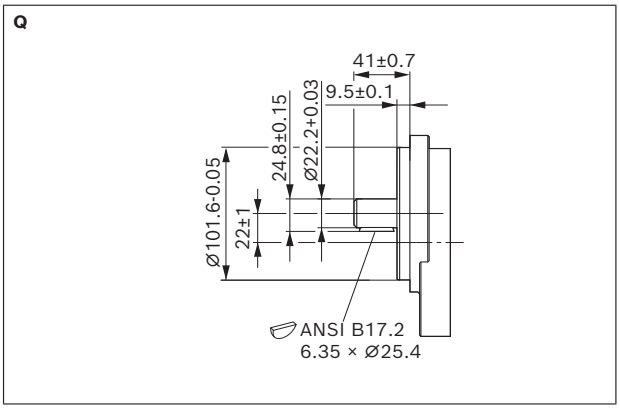

Knowledge is POWER – Motion Force Control is our Business
HYQUIP Limited New Brunswick Street Horwich Bolton Lancashire BL6 7JB UK

HYQUIP
+44 (0)1204 699959
enquiries@hyquip.co.uk
hyquip.co.uk

Front covers

▼ **Rectangular flange spigot dia. 105 mm**

B

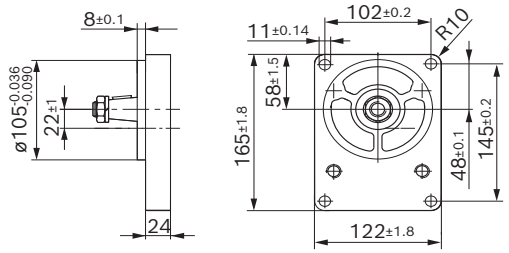

▼ **Rectangular flange spigot dia. 50.78 mm**

O

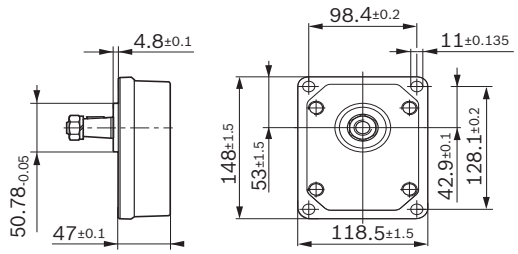

▼ **2-bolt flange SAE J744 101-2 (B) spigot dia. 101.6 mm**

C

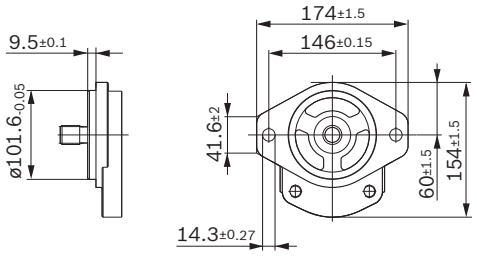

Knowledge is POWER – Motion Force Control is our Business
HYQUIP Limited New Brunswick Street Horwich Bolton Lancashire BL6 7JB UK

HYQUIP
+44 (0)1204 699959
enquiries@hyquip.co.uk
hyquip.co.uk

Port connections

▼ **SAE flange connection acc. to ISO 6162-1 with metric thread**

07

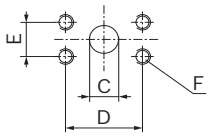

Nominal size	Pressure side C mm	D mm	E mm	F	Suction side C mm	D mm	E mm	F
22 ... 36	18	47.6	22.2	M10; 18 mm deep	25	52.4	26.2	M10; 18 mm deep
40 ... 50	25	52.4	26.2		32	58.7	30.2	
56 ... 70	32	58.7	30.2		38	69.8	35.8	M12; 23 mm deep
80 ... 100	38	69.8	35.8	M12; 23 mm deep	50	77.8	42.8	

▼ **SAE flange connection acc. to ISO 6162-1 with UNC thread**

15

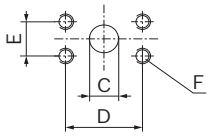

Nominal size	Pressure side C mm	D mm	E mm	F	Suction side C mm	D mm	E mm	F
22 ... 36	19	47.6	22.2	3/8-16 UNC-2B; 18 mm deep	25	52.4	26.2	3/8-16 UNC-2B; 18 mm deep
40 ... 50	25	52.4	26.2		32	58.7	30.2	7/16-14 UNC-2B; 18 mm deep
56 ... 63	32	58.7	30.2	7/16-14 UNC-2B; 18 mm deep	38	69.8	35.8	1/2-13 UNC-2B; 18 mm deep

▼ **Square flange (German version)**

20

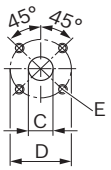

Nominal size	Pressure side C mm	D mm	E	Suction side C mm	D mm	E
22 ... 63	18	55	M8; 13 mm deep	26	55	M8; 13 mm deep

▼ **Square flange (Italian version)**

30

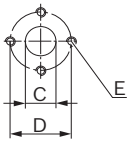

Nominal size	Pressure side C mm	D mm	E	Suction side C mm	D mm	E
22 ... 56	18	39.7	M8; 13 mm deep	26	50.8	M10; 13 mm deep
63	26	50.8	M10; 13 mm deep	36	62	

▼ **UN-thread acc. to ISO 11926-1/ASME B 1.1, O-ring**[1)]

12

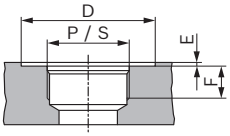

Nominal size	Pressure side P	D mm	E mm	F mm	Suction side S	D mm	E mm	F mm
22 ... 25	1 1/16-12 UN-2B	45	0.5	19	1 5/16-12 UN-2B	50	0.5	19
28 ... 40					1 5/8-12 UN-2B	58		
45 ... 63					1 7/8-12 UN-2B	68		

Port connections in rear cover

Nominal size	Pressure side P	E mm	F mm	Suction side S	E mm	F mm
22 ... 28	1 1/16-12 UN-2B	1	19	1 5/16-12 UN-2B	1	19
32 ... 63	1 5/16-12 UN-2B			1 5/8-12 UN-2B		

1) Limited service life with threaded ports (applicable for applications with p_2 > 210 bar)

Knowledge is POWER – Motion Force Control is our Business
HYQUIP Limited New Brunswick Street Horwich Bolton Lancashire BL6 7JB UK

HYQUIP
+44 (0)1204 699959
enquiries@hyquip.co.uk
hyquip.co.uk

Dimensions – Preferred program

Tapered keyed shaft 1:5 with rectangular flange spigot dia. 105 mm
AZPG–22– ... **CB20**MB

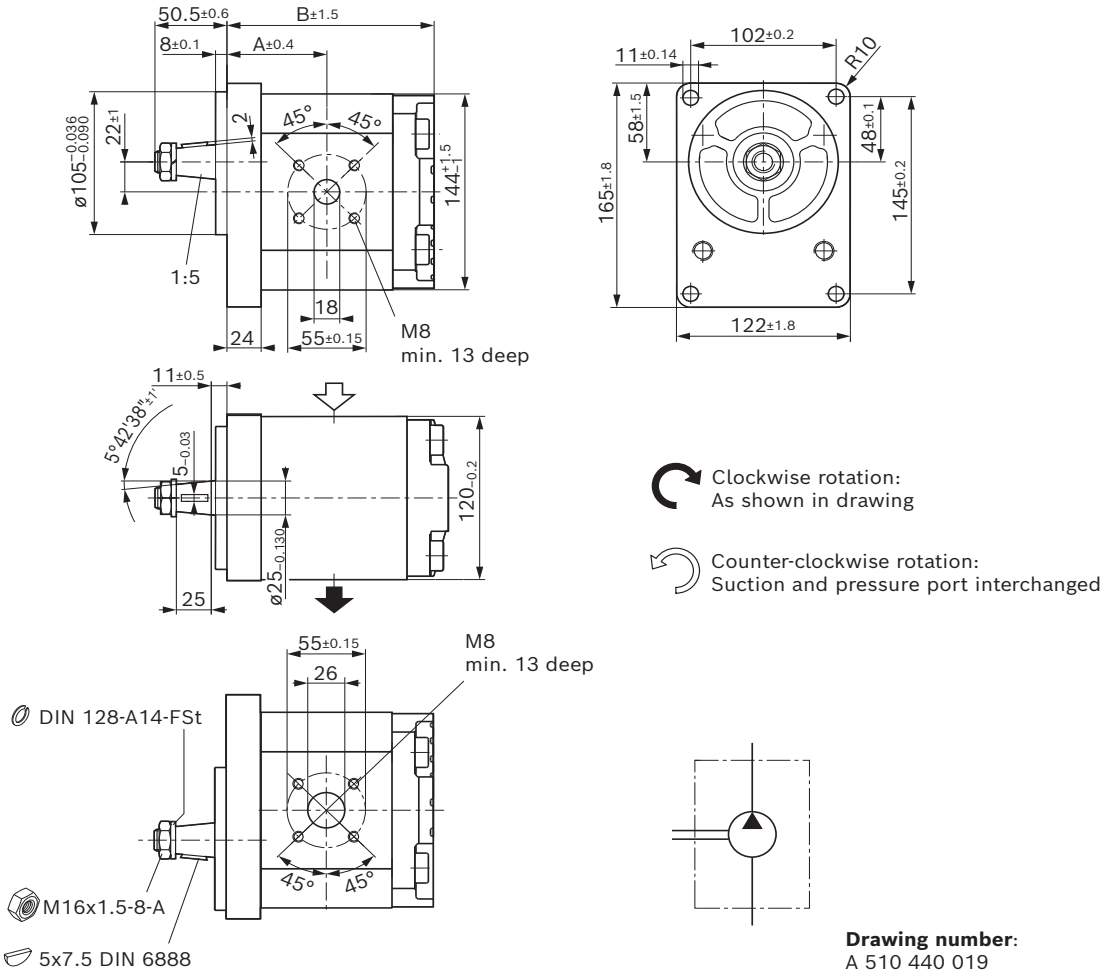

Drawing number:
A 510 440 019

NG	Material number Direction of rotation counter-clockwise	clockwise	Maximum intermittent pressure p_2 bar	Maximum speed n_{max} rpm	Weight m kg	Dimensions A mm	B mm
22	0510725441	0510725164	280	3000	10.3	60.9	124.6
25	0510725442	0510725165	280	3000	10.4	61.9	126.6
28	0510725443	0510725166	280	3000	10.5	63.2	129.1
32	0510725444	0510725167	280	2800	10.7	64.8	132.4
36	0510725445	0510725168	280	2800	10.9	66.4	135.7
40	0510725446	0510725169	280	2800	11.0	68.1	139.0
45	0510725447	0510725170	280	2600	11.2	70.1	143.1
50	0510825324	0510825024	250	2600	11.4	72.2	147.2
56	0510825325	0510825025	225	2300	11.7	74.7	152.2
63	0510825326	0510825026	200	2300	12.0	77.6	158.0

Knowledge is POWER – Motion Force Control is our Business
HYQUIP Limited New Brunswick Street Horwich Bolton Lancashire BL6 7JB UK

Tapered keyed shaft 1:8 with rectangular flange spigot dia. 50.78 mm

AZPG–22– ... **HO30**MB

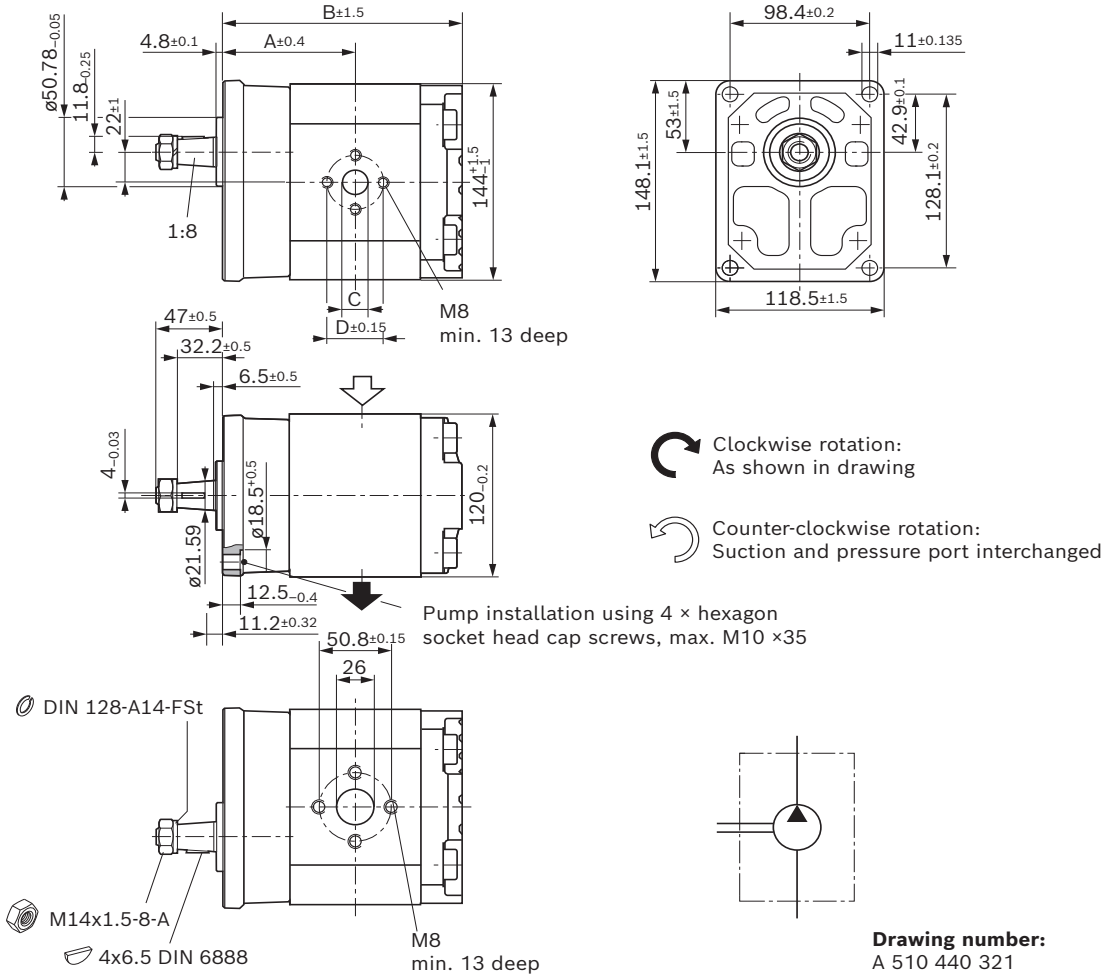

Drawing number:
A 510 440 321

NG	Material number Direction of rotation counter-clockwise	clockwise	Maximum intermittent pressure p_2 bar	Maximum speed n_{max} rpm	Weight m kg	Dimensions A mm	B mm
22	0510725448	0510725171	280	3000	9.6	63.9	147.8
25	0510725449	0510725172	280	3000	9.7	84.9	149.8
28	0510725450	0510725173	280	3000	9.8	86.2	152.3
32	0510725451	0510725174	280	2800	10.0	87.8	155.6
36	0510725452	0510725175	280	2800	10.1	89.4	158.9
40	0510725453	0510725176	280	2800	10.3	91.1	162.3
45	0510725454	0510725177	280	2600	10.5	93.1	166.3
50	0510825327	0510825027	250	2600	10.7	95.2	170.5
56	0510825328	0510825028	225	2300	11.0	97.7	175.4
63	0510825329	0510825029	200	1800	11.2	100.6	181.3

RE 10093/2023-03-16, Bosch Rexroth AG.

Splined shaft SAE J744 22-4 13T with 2-bolt flange SAE J744 101-2 (B) spigot dia. 101.6 mm

AZPG–22– ... **DC07**KB

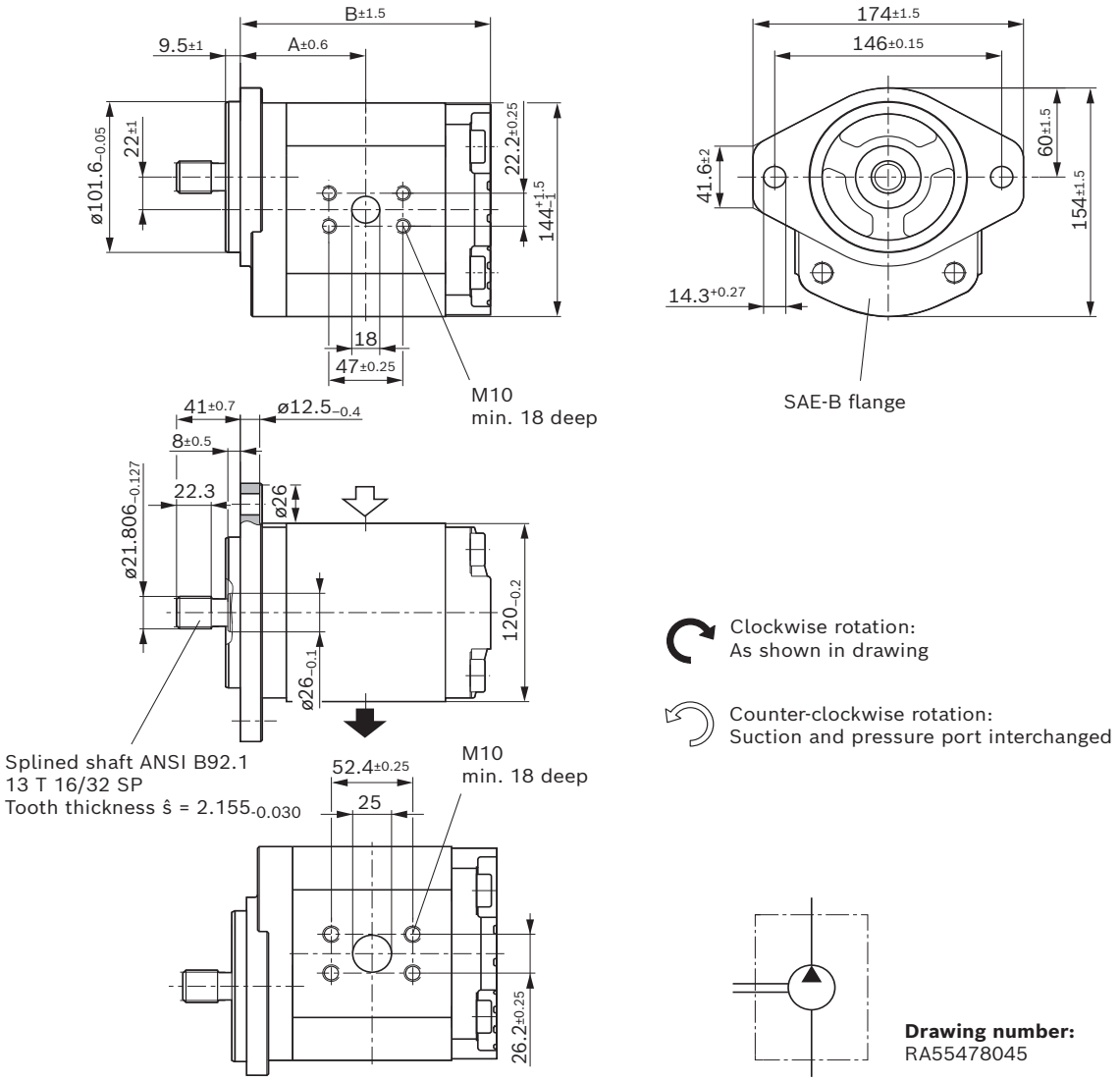

NG	Material number Direction of rotation counter-clockwise	 clockwise	Maximum intermittent pressure p_2 bar	Maximum speed n_{max} rpm	Weight m kg	Dimensions A mm	 B mm
22	0510725434	0510725157	280	3000	9.6	66.4	130.1
25	0510725435	0510725158	280	3000	9.7	67.4	132.1
28	0510725436	0510725159	280	3000	9.8	68.7	134.6

Splined shaft SAE J744 22-4 13T with 2-bolt flange SAE J744 101-2 (B) spigot dia. 101.6 mm
AZPG–22– ... **DC07**KB

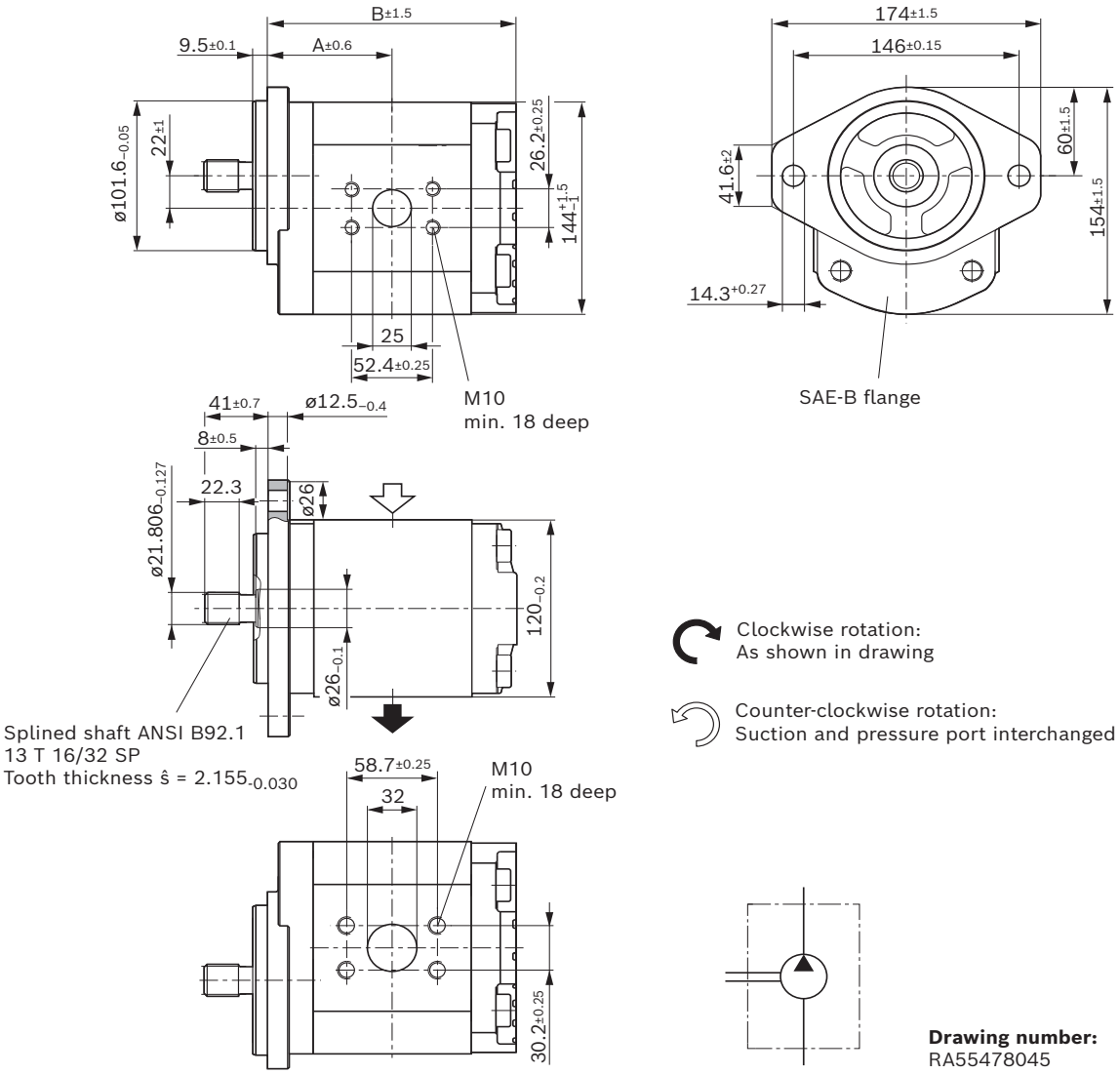

NG	Material number Direction of rotation counter-clockwise	 clockwise	Maximum intermittent pressure p_2 bar	Maximum speed n_{max} rpm	Weight m kg	Dimensions A mm	 B mm
32	0510725437	0510725160	280	2800	10.0	70.3	137.9
36	0510725438	0510725161	280	2800	10.1	71.9	141.2
40	0510725439	0510725162	280	2800	10.3	73.6	144.5
45	0510725440	0510725163	280	2600	10.5	75.6	148.6
50	0510825321	0510825021	250	2600	10.7	77.7	152.7

RE 10093/2023-03-16, Bosch Rexroth AG.

HYQUIP
+44 (0)1204 699959
enquiries@hyquip.co.uk
hyquip.co.uk

Splined shaft SAE J744 22-4 13T with 2-bolt flange SAE J744 101-2 (B) spigot dia. 101.6 mm

AZPG–22– ... **DC07**KB

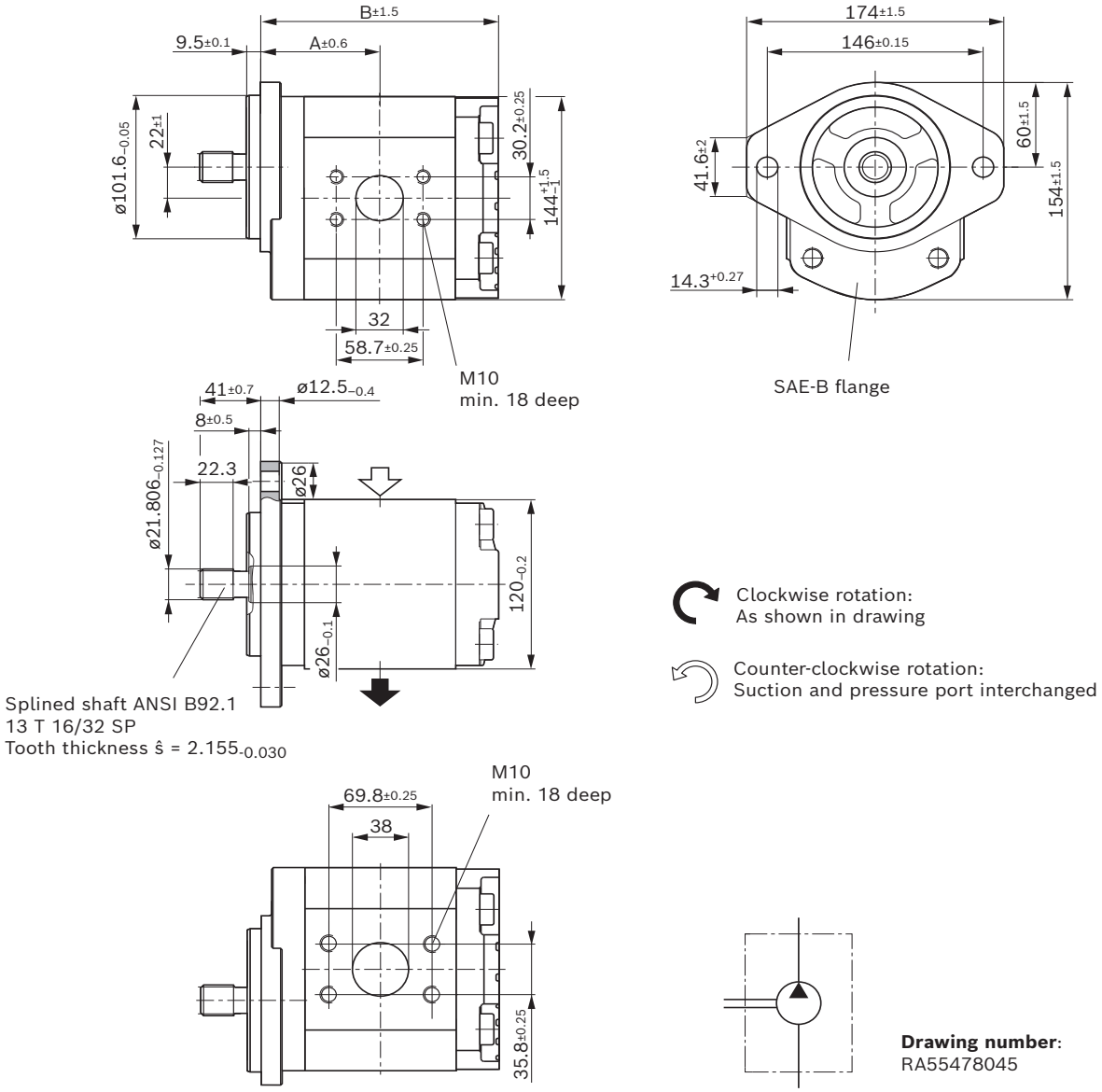

NG	Material number Direction of rotation counter-clockwise	 clockwise	Maximum intermittent pressure p_2 bar	Maximum speed n_{max} rpm	Weight m kg	Dimensions A mm	 B mm
56	0510825322	0510825022	225	2300	11.0	80.2	157.7
63	0510825323	0510825023	200	2300	11.3	83.1	163.5

Knowledge is POWER – Motion Force Control is our Business
HYQUIP Limited New Brunswick Street Horwich Bolton Lancashire BL6 7JB UK

Splined shaft SAE J744 22-4 13T with 2-bolt flange SAE J744 101-2 (B) spigot dia. 101.6 mm
AZPG–22– ... **DC07**KB - S0039

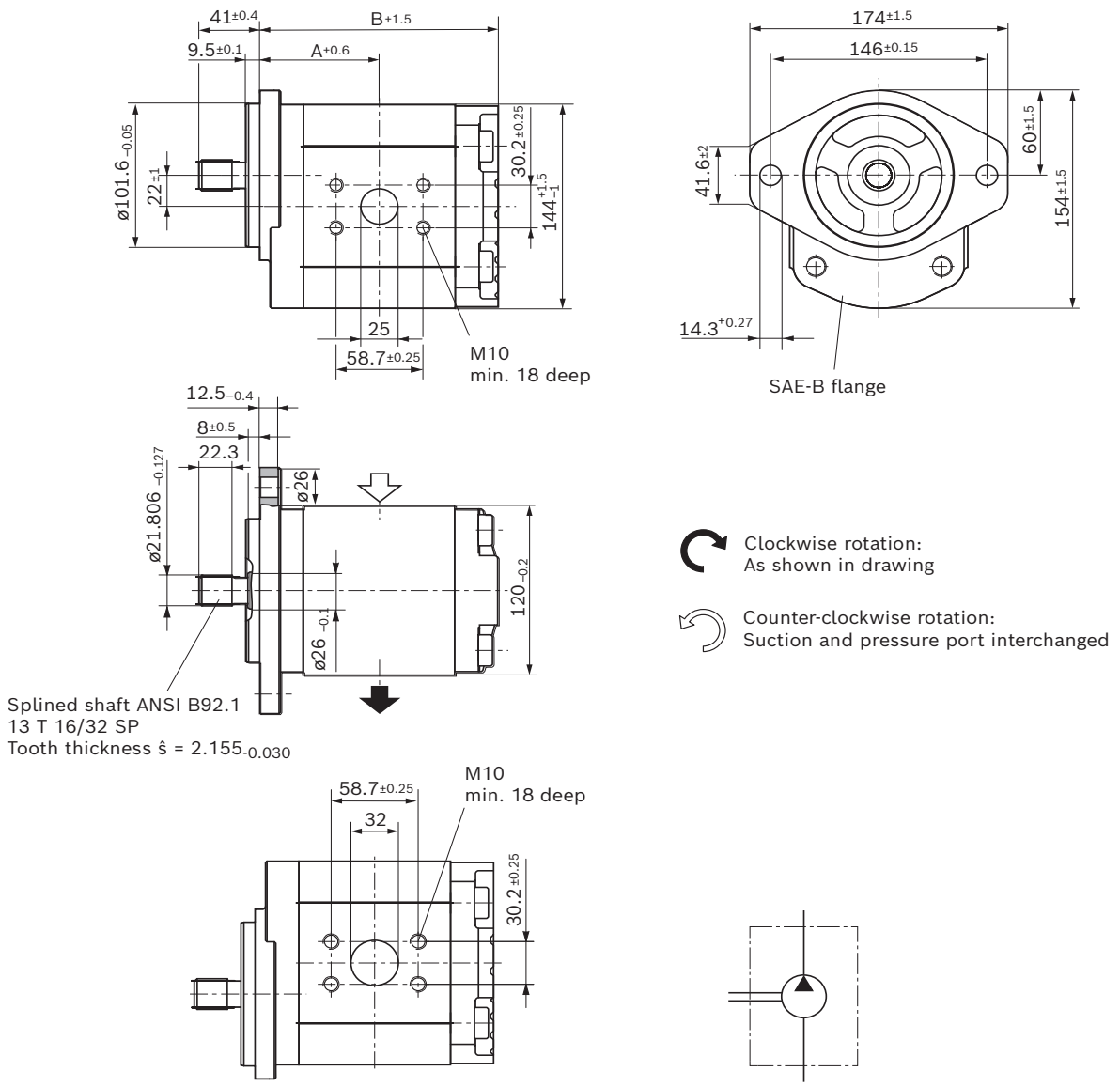

Drawing number:
A 510 441 285

NG	Material number Direction of rotation counter-clockwise	clockwise	Maximum intermittent pressure p_2 bar	Maximum speed n_{max} rpm	Dimensions A mm	B mm
40	0510725421	0510725136	280	2800	73.6	144.8
50	0510725420	0510725135	250	2600	77.7	153.0

Knowledge is POWER – Motion Force Control is our Business
HYQUIP Limited New Brunswick Street Horwich Bolton Lancashire BL6 7JB UK

HYQUIP
+44 (0)1204 699959
enquiries@hyquip.co.uk
hyquip.co.uk

Splined shaft SAE J744 22-4 13T with 2-bolt flange SAE J744 101-2 (B) spigot dia. 101.6 mm

AZPG–22– ... **DC07**KB - S0039

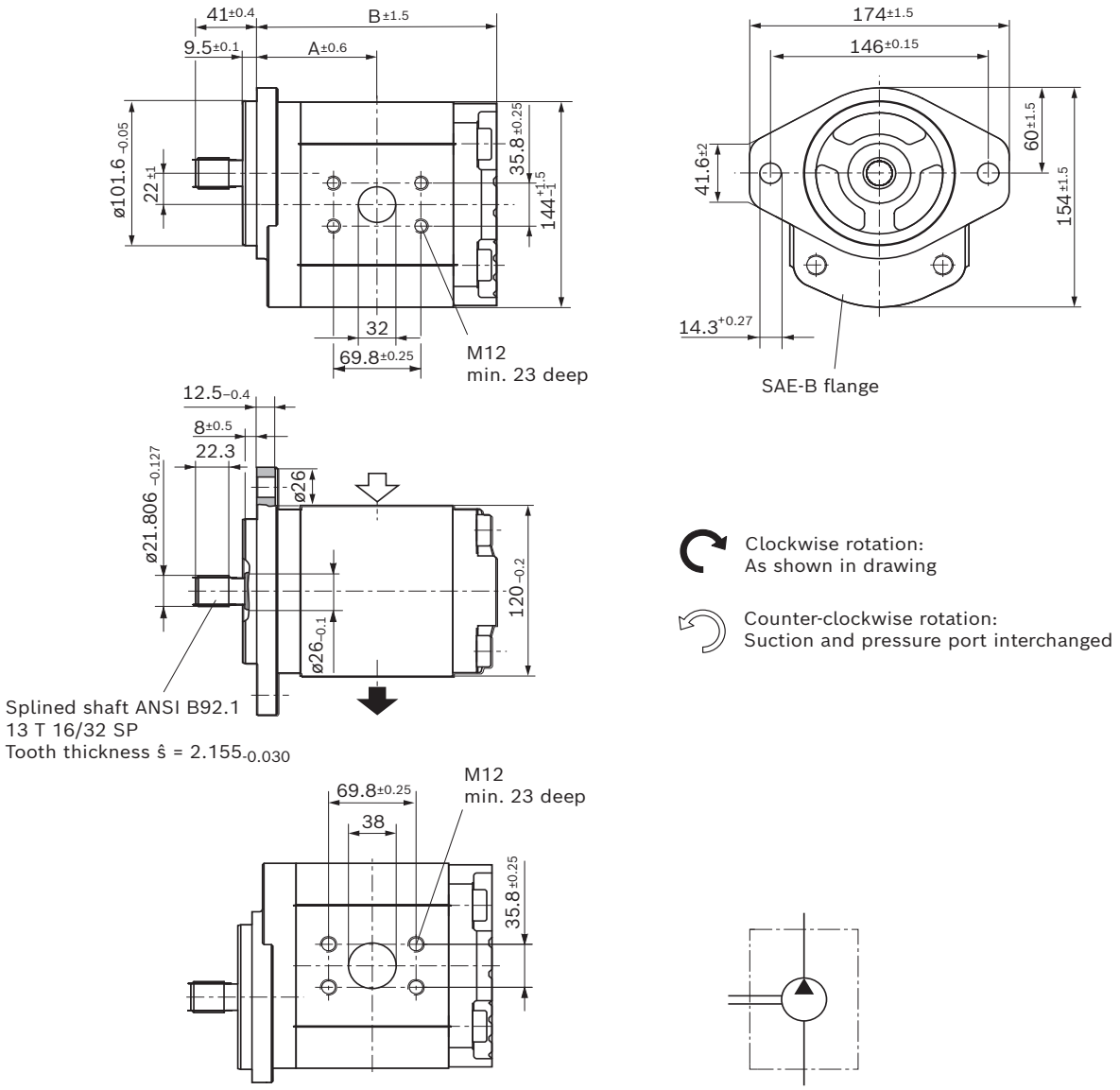

Drawing number:
A 510 441 285

NG	Material number Direction of rotation counter-clockwise	 clockwise	Maximum intermittent pressure p_2 bar	Maximum speed n_{max} rpm	Dimensions A mm	 B mm
63	0510825313	0510825011	200	2300	83.1	163.8
70	0510825312	0510825014	150	2200	86.0	169.5

Knowledge is POWER – Motion Force Control is our Business
HYQUIP Limited New Brunswick Street Horwich Bolton Lancashire BL6 7JB UK

HYQUIP
+44 (0)1204 699959
enquiries@hyquip.co.uk
hyquip.co.uk

Splined shaft SAE J744 22-4 13T with 2-bolt flange SAE J744 101-2 (B) spigot dia. 101.6 mm

AZPG–22– ... **DC07**KB - S0039

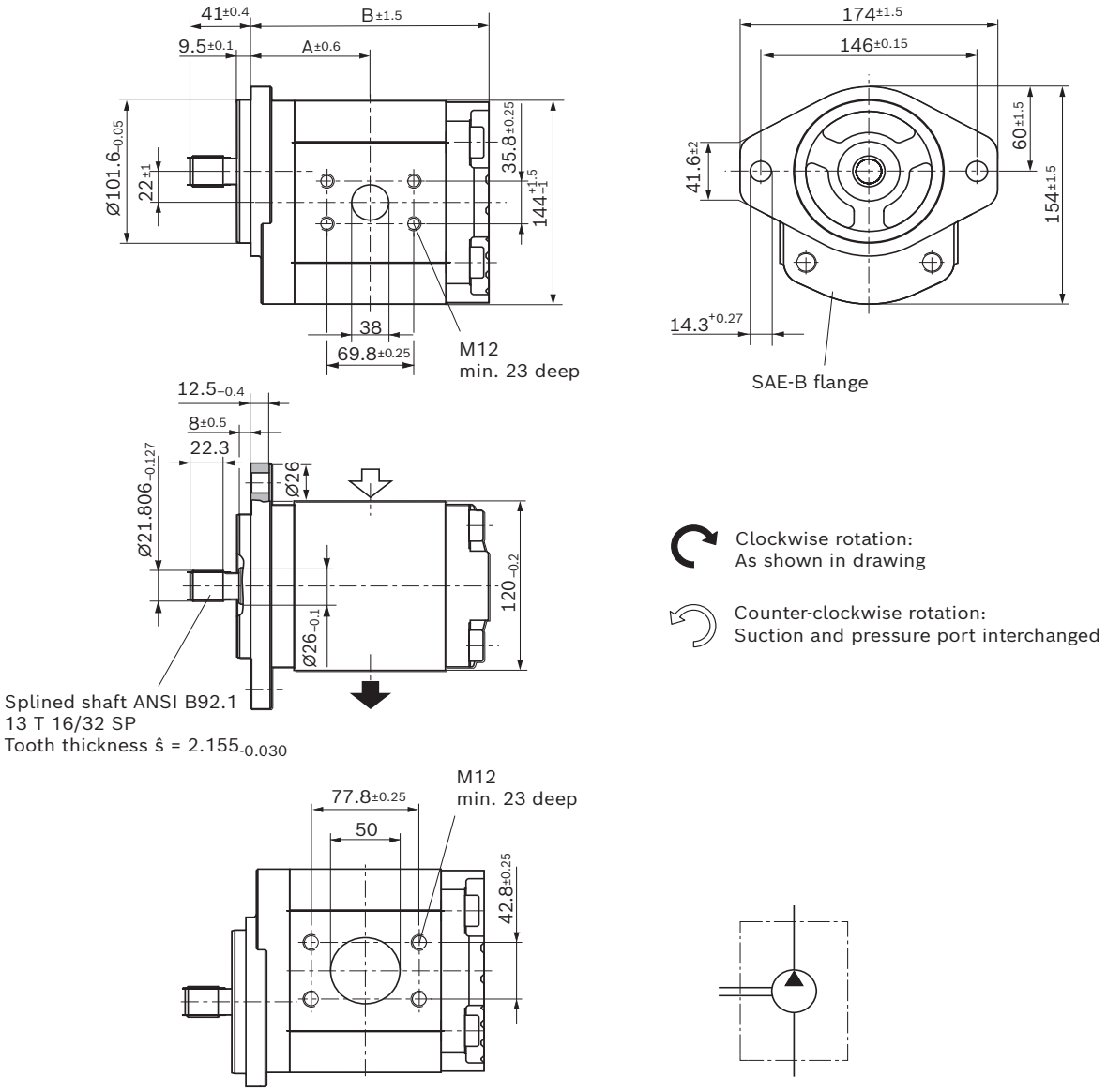

NG	Material number Direction of rotation counter-clockwise	clockwise	Maximum intermittent pressure p_2 bar	Maximum speed n_{max} rpm	Dimensions A mm	B mm
80	0510825311	0510825012	120	2200	90.1	177.8
100	0510825310	0510825013	100	1700	98.3	194.3

RE 10093/2023-03-16, Bosch Rexroth AG.

HYQUIP
+44 (0)1204 699959
enquiries@hyquip.co.uk
hyquip.co.uk

Splined shaft SAE J744 22-4 13T with 2-bolt flange SAE J744 101-2 (B) spigot dia. 101.6 mm

AZPG–22– ... **DC12**MB

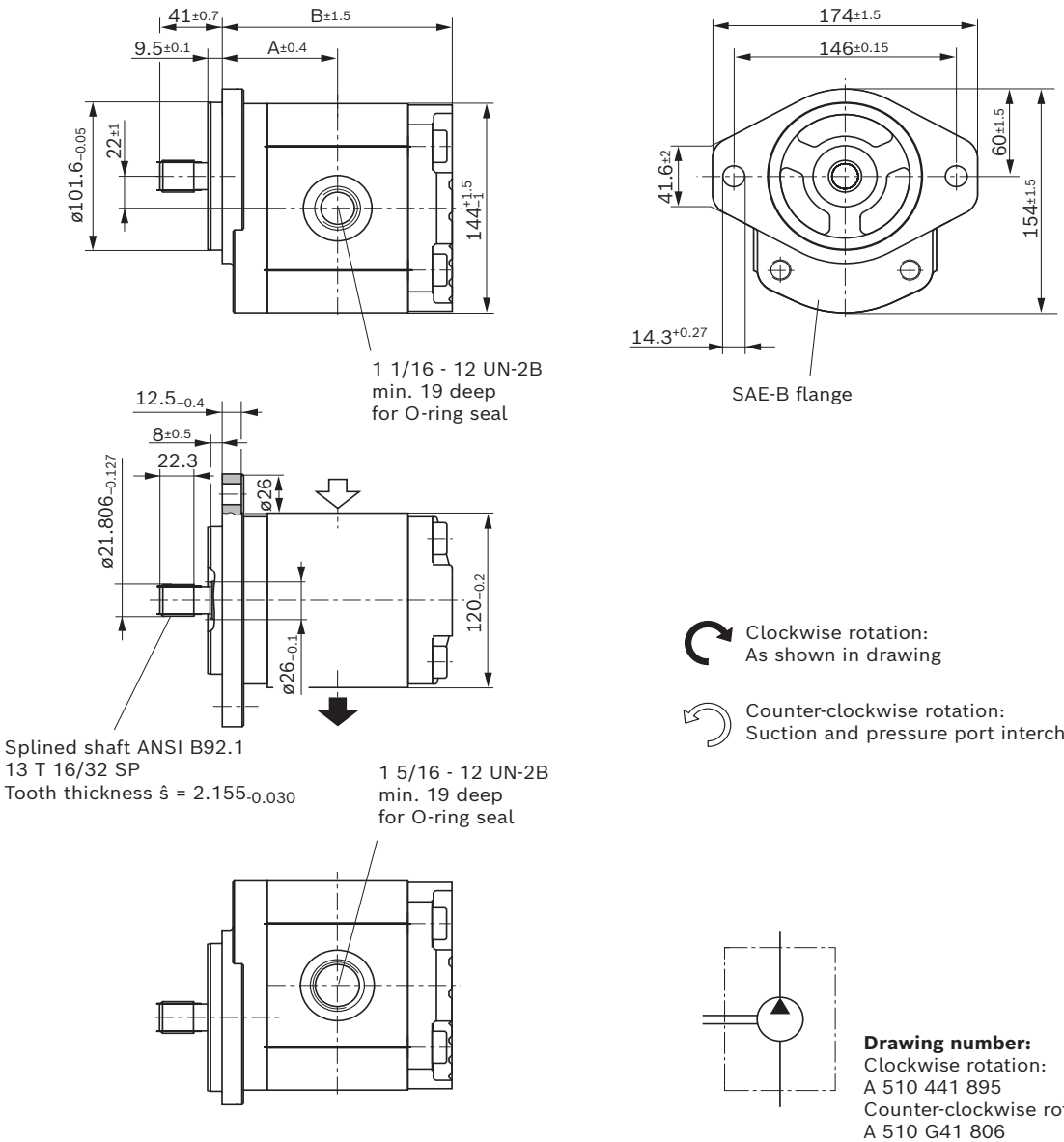

NG	Material number Direction of rotation counter-clockwise	 clockwise	Maximum intermittent pressure[1] p_2 bar	Maximum speed n_{max} rpm	Dimensions A mm	 B mm
22	9510490011	9510490001	250	3000	66.4	130.3
25	9510490012	9510490002	250	3000	67.4	132.3
28	9510490013	9510490003	250	3000	68.7	134.8

1) Limited service life with threaded ports (applicable for applications with p_2 > 210 bar)

Knowledge is POWER – Motion Force Control is our Business
HYQUIP Limited New Brunswick Street Horwich Bolton Lancashire BL6 7JB UK

Splined shaft SAE J744 22-4 13T with 2-bolt flange SAE J744 101-2 (B) spigot dia. 101.6 mm
AZPG–22– ... **DC12**MB

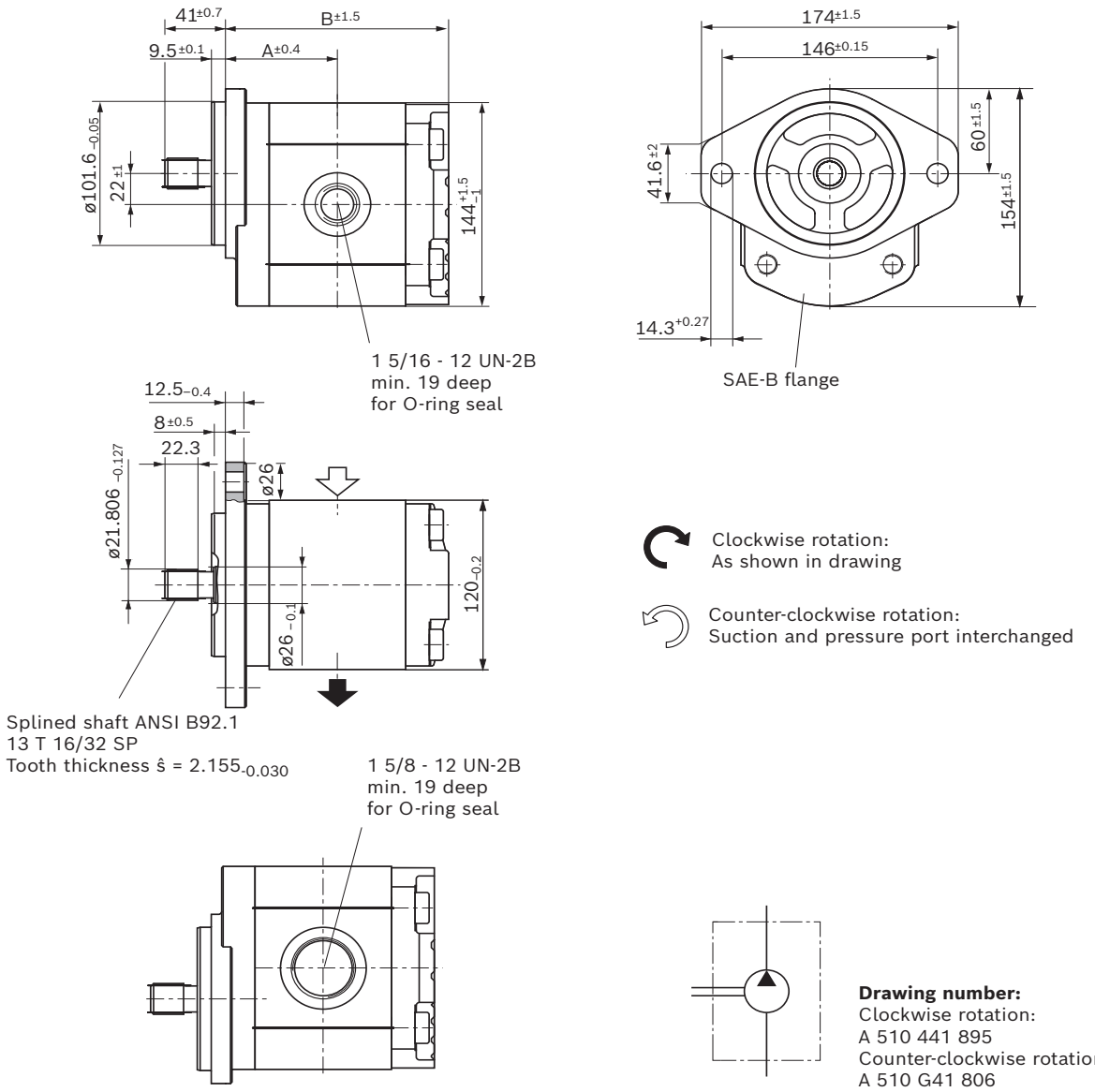

NG	Material number Direction of rotation counter-clockwise	 clockwise	Maximum intermittent pressure[1] p_2 bar	Maximum speed n_{max} rpm	Dimensions A mm	 B mm
32	9510490014	9510490004	250	2800	70.3	138.1
36	9510490015	9510490005	250	2800	71.9	141.5
40	9510490016	9510490006	250	2800	73.6	144.8
45	9510490017	9510490007	250	2600	75.6	148.8

1) Limited service life with threaded ports (applicable for applications with p_2 > 210 bar)

Knowledge is POWER – Motion Force Control is our Business
HYQUIP Limited New Brunswick Street Horwich Bolton Lancashire BL6 7JB UK

HYQUIP
+44 (0)1204 699959
enquiries@hyquip.co.uk
hyquip.co.uk

Splined shaft SAE J744 22-4 13T with 2-bolt flange SAE J744 101-2 (B) spigot dia. 101.6 mm

AZPG–22– ... **DC12**MB

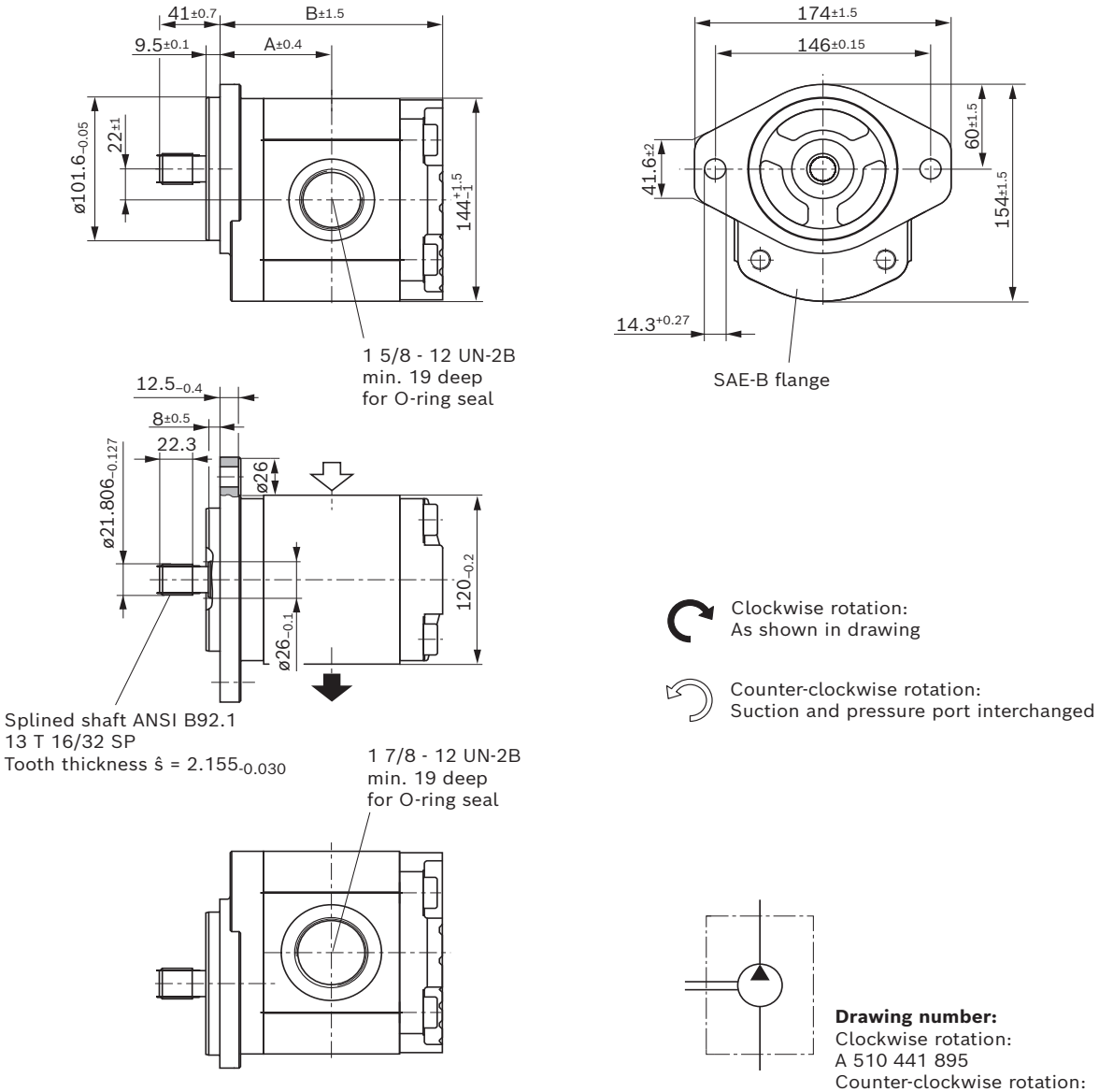

NG	Material number Direction of rotation counter-clockwise	clockwise	Maximum intermittent pressure[1] p_2 bar	Maximum speed n_{max} rpm	Dimensions A mm	B mm
50	9510490018	9510490008	220	2600	77.7	153.0
56	9510490019	9510490009	195	2300	80.2	157.9
63	9510490020	9510490010	170	2300	63.1	163.8

1) Limited service life with threaded ports (applicable for applications with p_2 > 210 bar)

Knowledge is POWER – Motion Force Control is our Business
HYQUIP Limited New Brunswick Street Horwich Bolton Lancashire BL6 7JB UK

HYQUIP
+44 (0)1204 699959
enquiries@hyquip.co.uk
hyquip.co.uk

Splined shaft SAE J744 22-4 13T with 2-bolt flange SAE J744 101-2 (B) spigot dia. 101.6 mm
AZPG–22– ... **DC12**MA

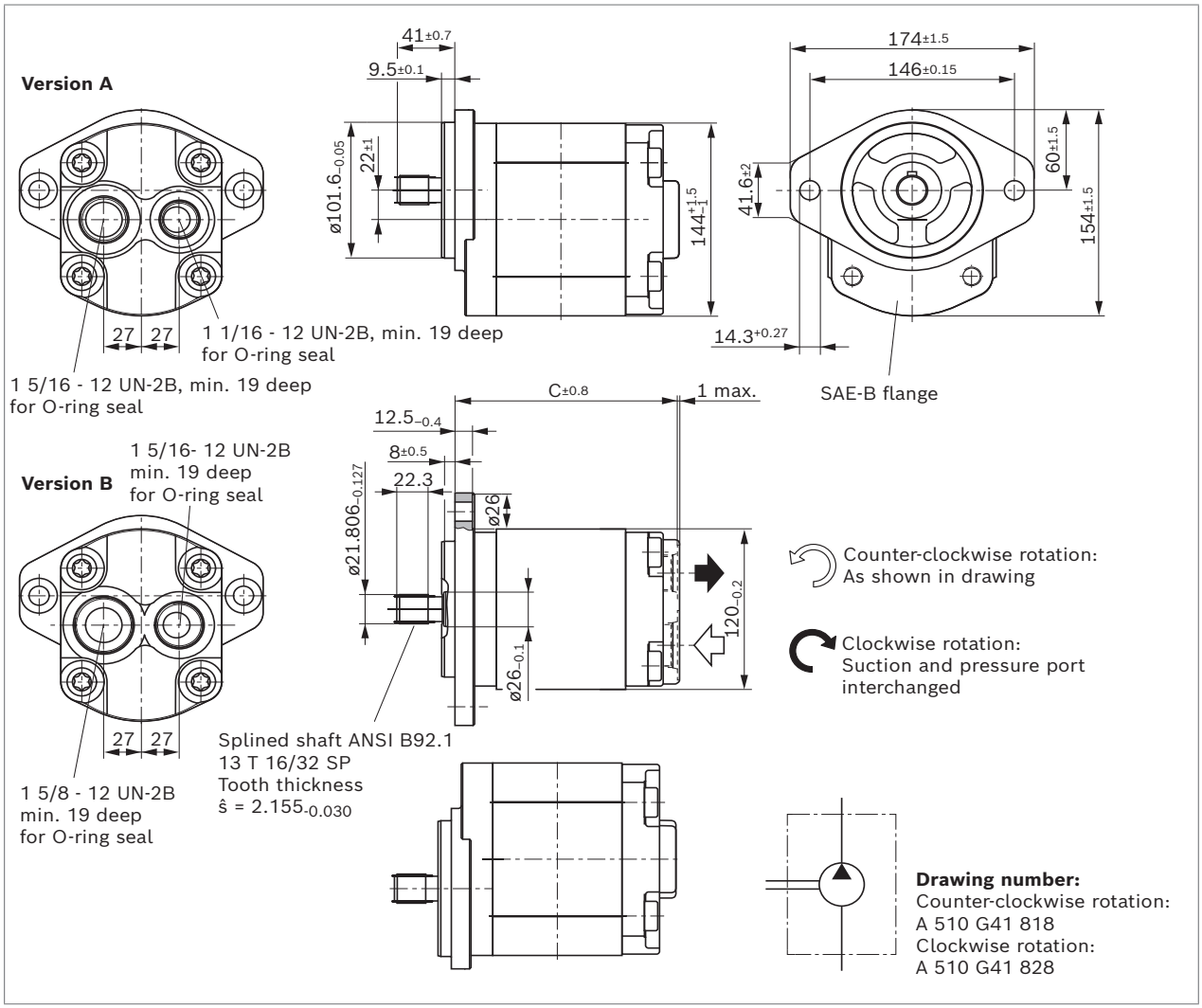

NG	Material number Direction of rotation counter-clockwise	 clockwise	Maximum intermittent pressure p_2 bar	Maximum speed n_{max} rpm	Dimensions C mm	Version
22	9510490071	9510490061	250	3000	141.2	A
25	9510490072	9510490062	250	3000	143.2	A
28	9510490073	9510490063	250	3000	145.7	A
32	9510490074	9510490064	250	2800	149.0	B
36	9510490075	9510490065	250	2800	152.4	B
40	9510490076	9510490066	250	2800	155.7	B
45	9510490077	9510490067	250	2600	159.7	B
50	9510490078	9510490068	220	2600	163.9	B
56	9510490079	9510490069	195	2300	169.8	B
63	9510490080	9510490070	170	2300	174.6	B

Knowledge is POWER – Motion Force Control is our Business
HYQUIP Limited New Brunswick Street Horwich Bolton Lancashire BL6 7JB UK

HYQUIP
+44 (0)1204 699959
enquiries@hyquip.co.uk
hyquip.co.uk

Splined shaft SAE J744 22-4 13T with 2-bolt flange SAE J744 101-2 (B) spigot dia. 101.6 mm

AZPG–22– ... **DC15**MB

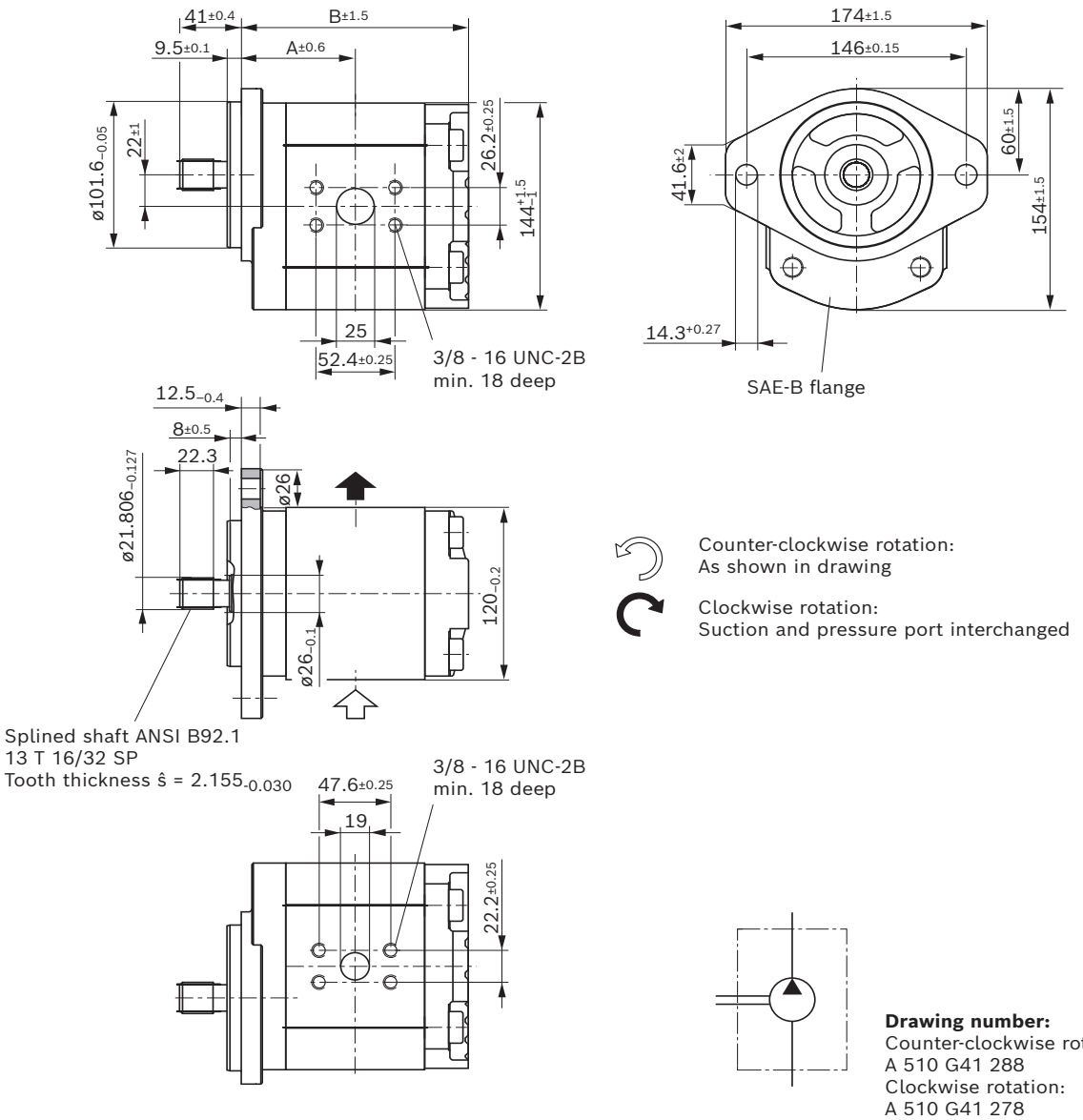

NG	Material number Direction of rotation counter-clockwise	clockwise	Maximum intermittent pressure p_2 bar	Maximum speed n_{max} rpm	Dimensions A mm	B mm
22	9510490051	9510490041	250	3000	66.4	130.3
25	9510490052	9510490042	250	3000	67.4	132.3
28	9510490053	9510490043	250	3000	68.7	134.8
32	9510490054	9510490044	250	2800	70.3	138.1
36	9510490055	9510490045	250	2800	71.9	141.5

Knowledge is POWER – Motion Force Control is our Business
HYQUIP Limited New Brunswick Street Horwich Bolton Lancashire BL6 7JB UK

Splined shaft SAE J744 22-4 13T with 2-bolt flange SAE J744 101-2 (B) spigot dia. 101.6 mm
AZPG–22– ... **DC15**MB

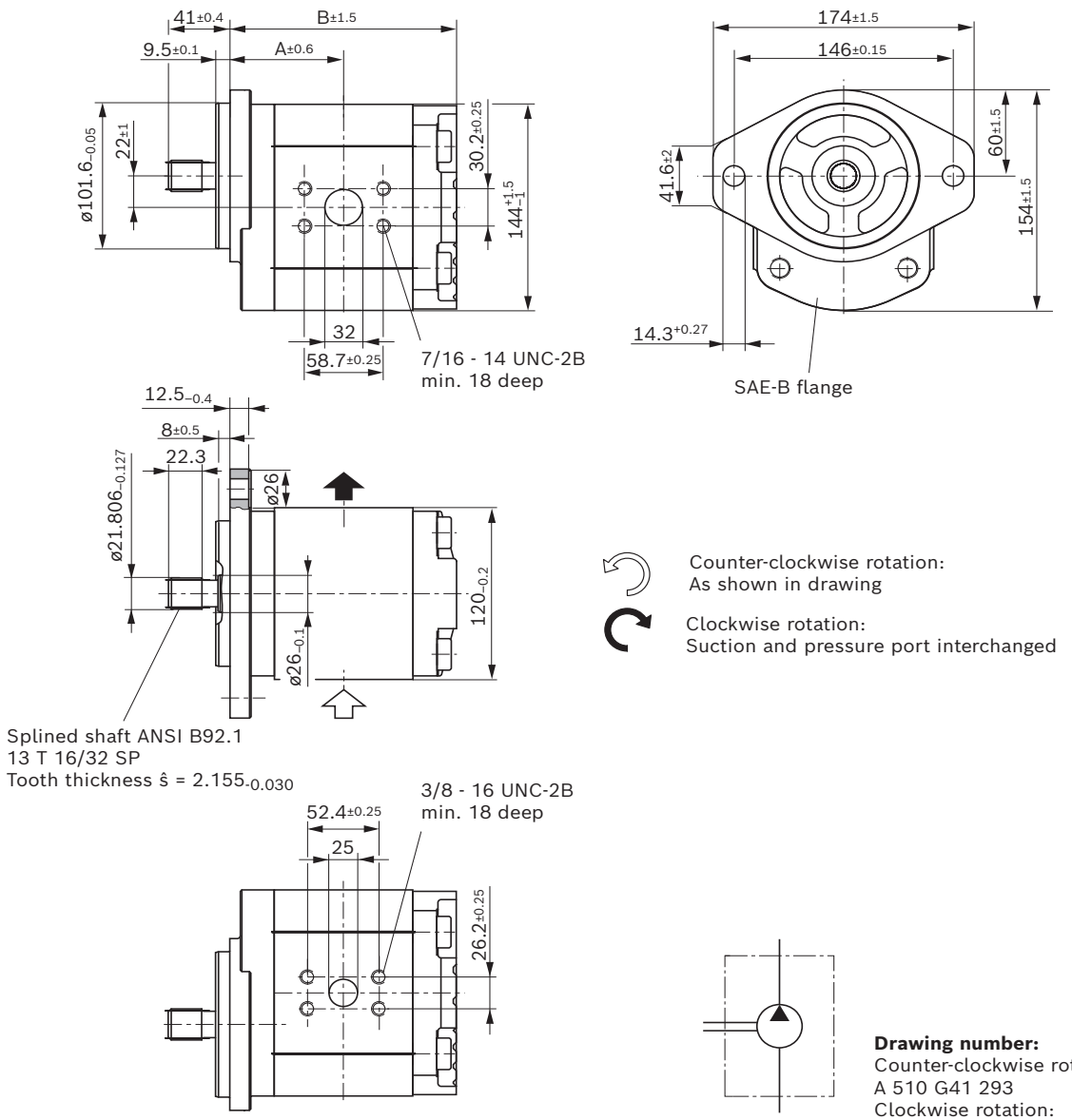

Drawing number:
Counter-clockwise rotation:
A 510 G41 293
Clockwise rotation:
A 510 G41 283

NG	Material number Direction of rotation counter-clockwise	clockwise	Maximum intermittent pressure p_2 bar	Maximum speed n_{max} rpm	Dimensions A mm	B mm
40	9510490056	9510490046	250	2800	73.6	144.8
45	9510490057	9510490047	250	2600	75.6	148.8
50	9510490058	9510490048	220	2600	77.7	153.0

Knowledge is POWER – Motion Force Control is our Business
HYQUIP Limited New Brunswick Street Horwich Bolton Lancashire BL6 7JB UK

Splined shaft SAE J744 22-4 13T with 2-bolt flange SAE J744 101-2 (B) spigot dia. 101.6 mm

AZPG–22– ... **DC15**MB

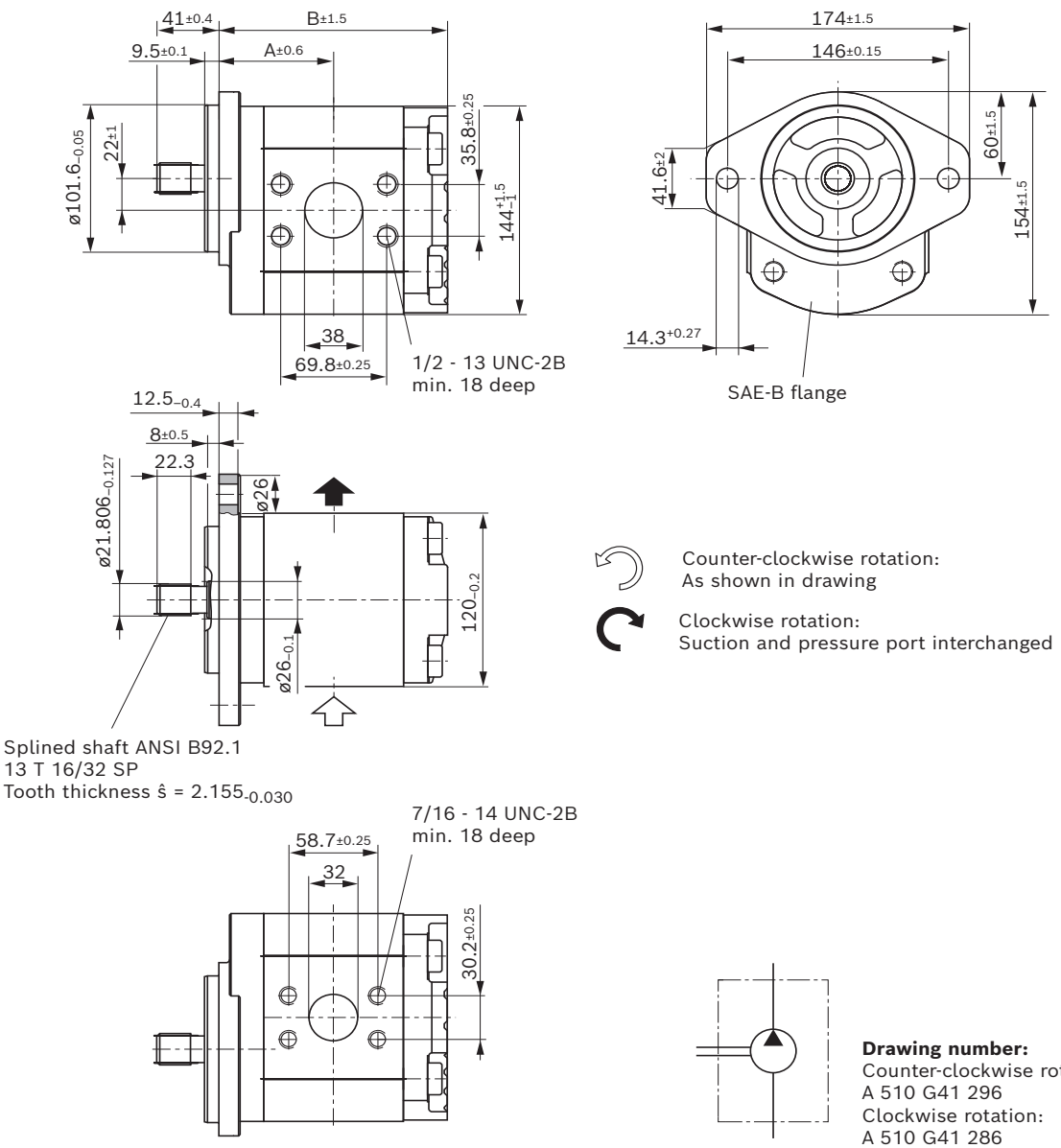

NG	Material number Direction of rotation counter-clockwise	 clockwise	Maximum intermittent pressure p_2 bar	Maximum speed n_{max} rpm	Dimensions A mm	 B mm
56	9510490059	9510490049	195	2300	80.2	157.9
63	9510490060	9510490050	170	2300	83.1	163.8

HYQUIP
+44 (0)1204 699959
enquiries@hyquip.co.uk
hyquip.co.uk

Parallel keyed shaft SAE J744 22-1 with 2-bolt flange SAE J744 101-2 (B) spigot dia. 101.6 mm
AZPG–22– ... **QC12**MB

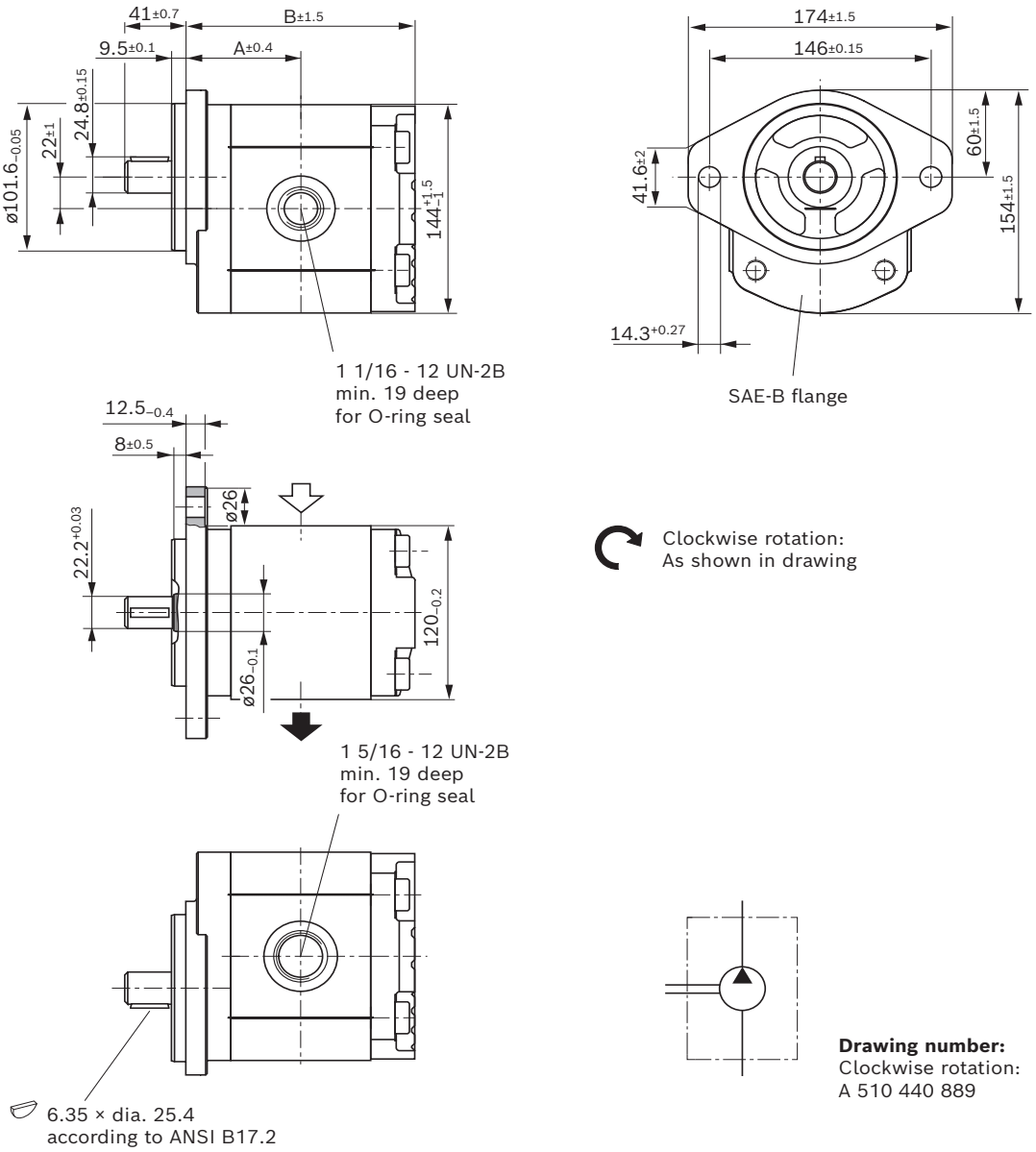

NG	Material number Direction of rotation counter-clockwise	clockwise	Maximum intermittent pressure[1] p_2 bar	Maximum speed n_{max} rpm	Dimensions A mm	B mm
22		9510490021	250	3000	66.4	130.3
25		9510490022	250	3000	67.4	132.3
28		9510490023	250	3000	68.7	134.8

1) Limited service life with threaded ports (applicable for applications with p_2 > 210 bar)

Knowledge is POWER – Motion Force Control is our Business
HYQUIP Limited New Brunswick Street Horwich Bolton Lancashire BL6 7JB UK

HYQUIP
+44 (0)1204 699959
enquiries@hyquip.co.uk
hyquip.co.uk

Parallel keyed shaft SAE J744 22-1 with 2-bolt flange SAE J744 101-2 (B) spigot dia. 101.6 mm

AZPG–22– ... **QC12**MB

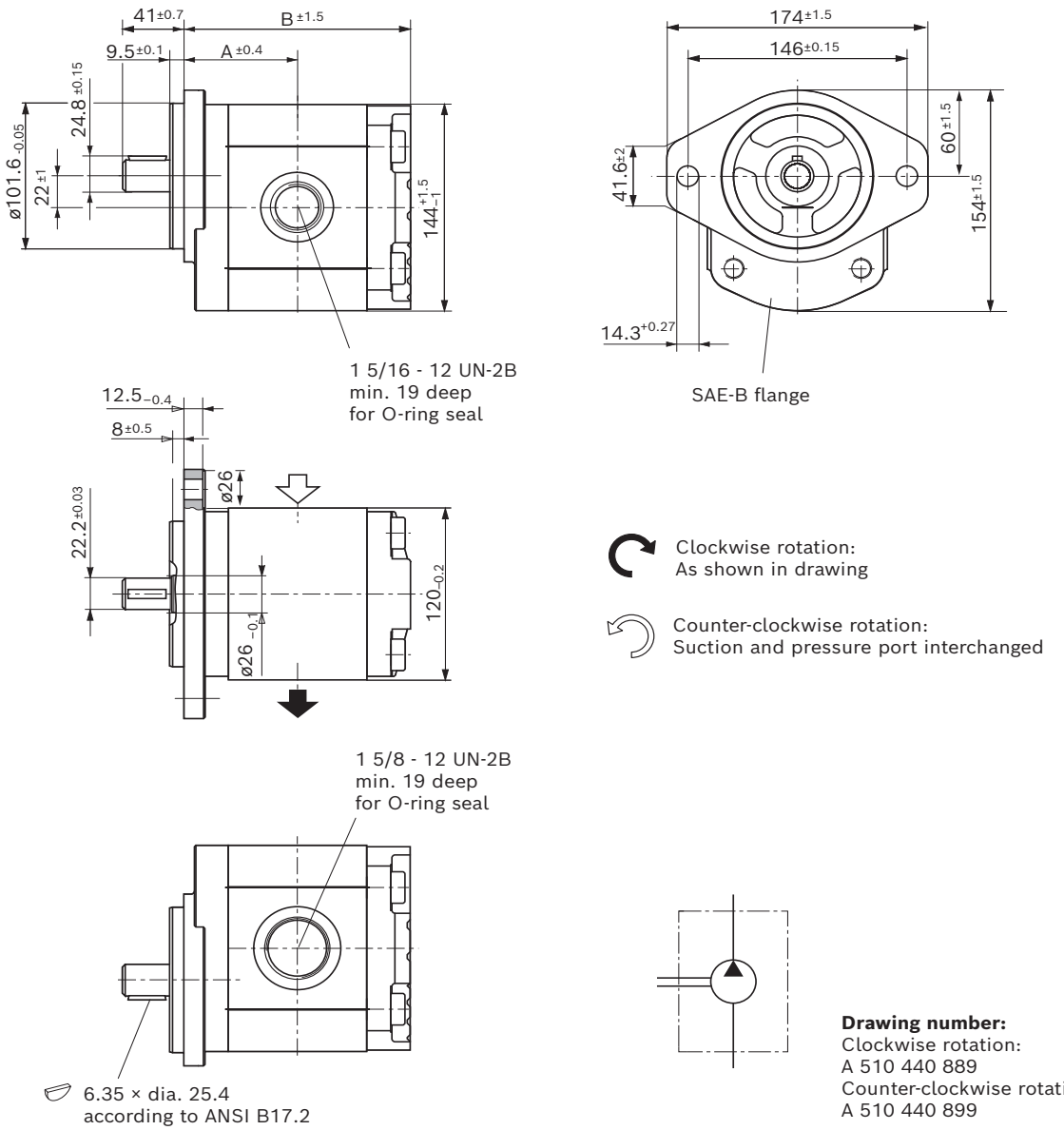

Drawing number:
Clockwise rotation:
A 510 440 889
Counter-clockwise rotation:
A 510 440 899

NG	Material number Direction of rotation counter-clockwise	clockwise	Maximum intermittent pressure[1] p_2 bar	Maximum speed n_{max} rpm	Dimensions A mm	B mm
32	9510490034	9510490024	250	2800	70.3	138.1
36	9510490035	9510490025	250	2800	71.9	141.5
40		9510490026	250	2800	73.6	144.8
45	9510490037	9510490027	250	2600	75.6	148.8

1) Limited service life with threaded ports (applicable for applications with p_2 > 210 bar)

Knowledge is POWER – Motion Force Control is our Business
HYQUIP Limited New Brunswick Street Horwich Bolton Lancashire BL6 7JB UK

HYQUIP
+44 (0)1204 699959
enquiries@hyquip.co.uk
hyquip.co.uk

Parallel keyed shaft SAE J744 22-1 with 2-bolt flange SAE J744 101-2 (B) spigot dia. 101.6 mm
AZPG–22– ... **QC12**MB

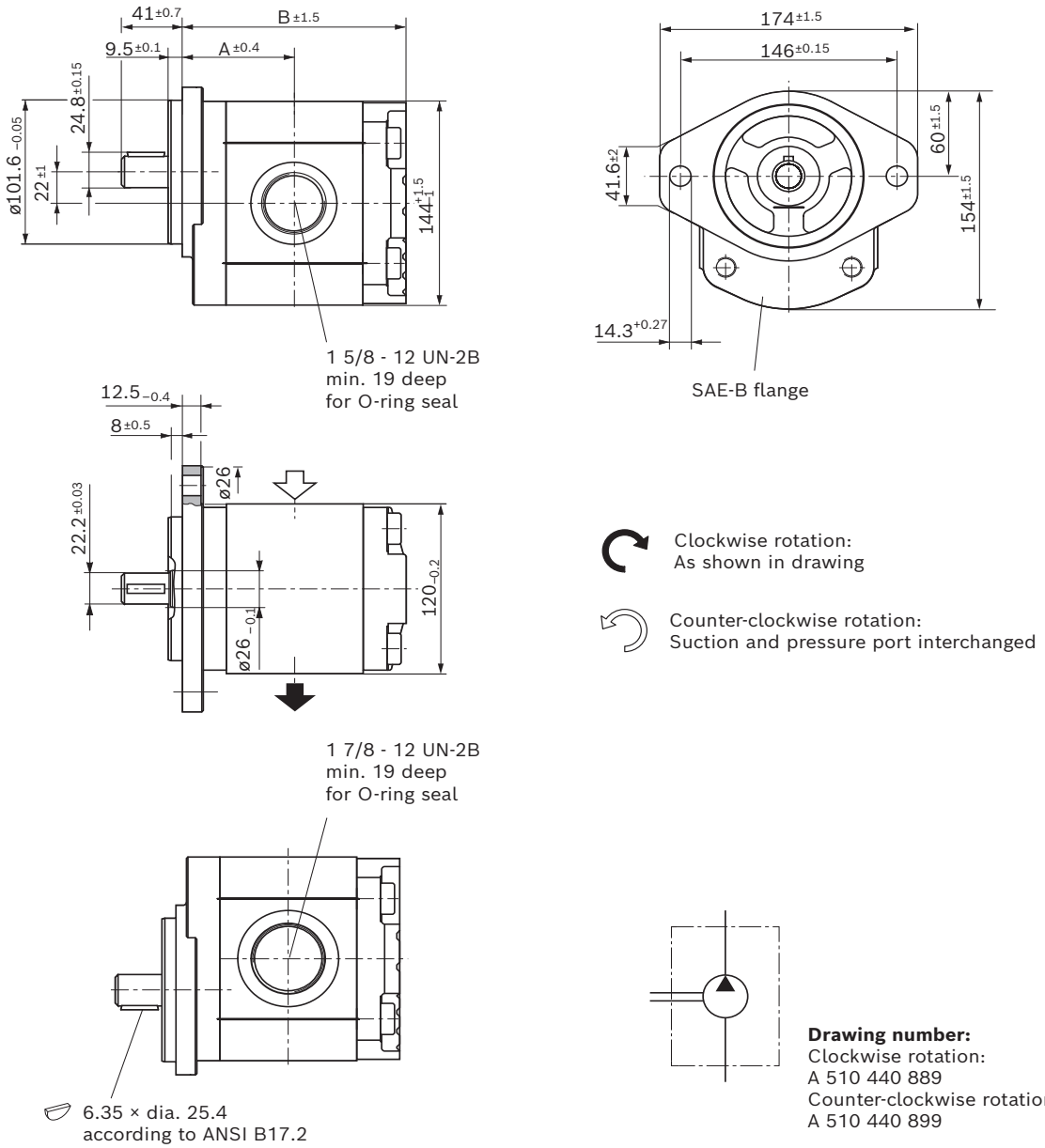

NG	Material number Direction of rotation counter-clockwise	clockwise	Maximum intermittent pressure[1] p_2 bar	Maximum speed n_{max} rpm	Dimensions A mm	B mm
50	9510490038	9510490028	220	2600	77.7	153.0
56	9510490039	9510490029	195	2300	80.2	157.9
63	9510490040	9510490030	170	2300	83.1	163.8

1) Limited service life with threaded ports (applicable for applications with p_2 > 210 bar)

Knowledge is POWER – Motion Force Control is our Business
HYQUIP Limited New Brunswick Street Horwich Bolton Lancashire BL6 7JB UK

HYQUIP
+44 (0)1204 699959
enquiries@hyquip.co.uk
hyquip.co.uk

Parallel keyed shaft SAE J744 22-1 with 2-bolt flange SAE J744 101-2 (B) spigot dia. 101.6 mm

AZPG–22– ... **QC12**MB - S0662

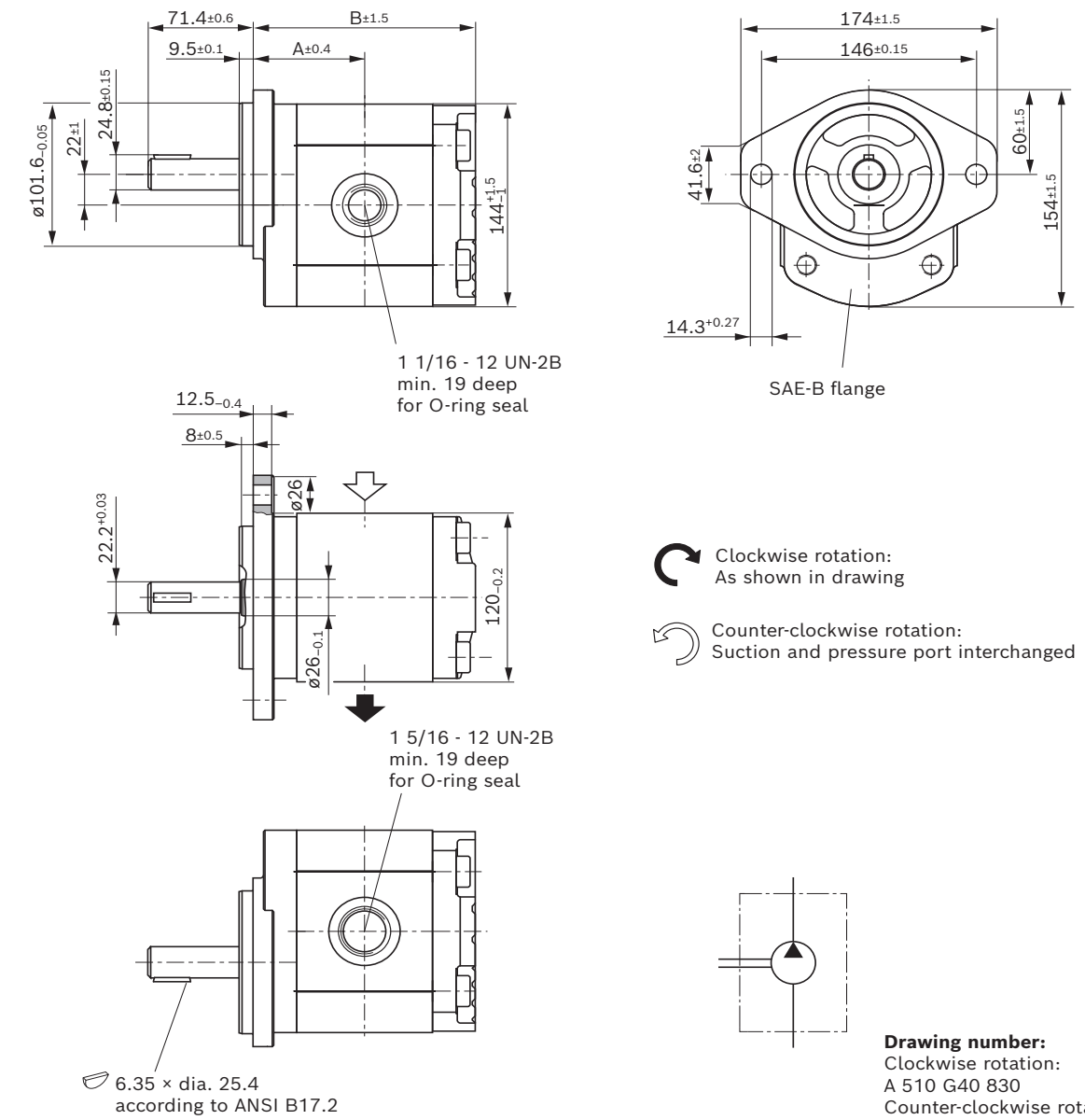

NG	Material number Direction of rotation counter-clockwise	clockwise	Maximum intermittent pressure[1] p_2 bar	Maximum speed n_{max} rpm	Dimensions A mm	B mm
22	9510490132	9510490122	250	3000	66.4	130.3
25	9510490133	9510490123	250	3000	67.4	132.3
28	9510490134	9510490124	250	3000	68.7	134.8

1) Limited service life with threaded ports (applicable for applications with p_2 > 210 bar)

Knowledge is POWER – Motion Force Control is our Business
HYQUIP Limited New Brunswick Street Horwich Bolton Lancashire BL6 7JB UK

HYQUIP
+44 (0)1204 699959
enquiries@hyquip.co.uk
hyquip.co.uk

Parallel keyed shaft SAE J744 22-1 with 2-bolt flange SAE J744 101-2 (B) spigot dia. 101.6 mm

AZPG–22– ... **QC12**MB - S0662

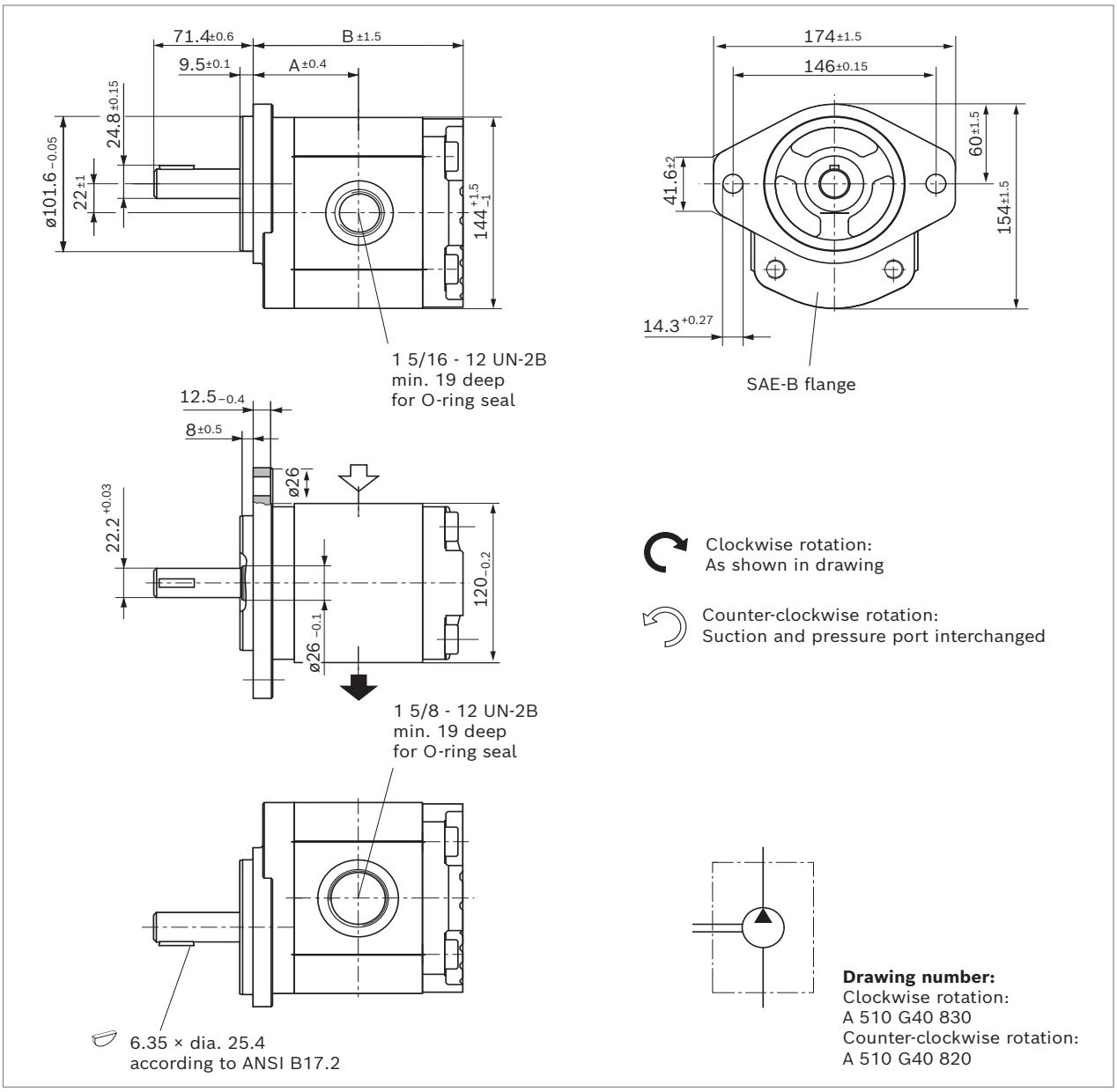

NG	Material number Direction of rotation counter-clockwise	 clockwise	Maximum intermittent pressure[1] p_2 bar	Maximum speed n_{max} rpm	Dimensions A mm	 B mm
32	9510490135	9510490125	250	2800	70.3	138.1
36	9510490136	9510490126	250	2800	71.9	141.5
40	9510490137	9510490127	250	2800	73.6	144.8
45	9510490138	9510490128	250	2800	75.6	148.8

1) Limited service life with threaded ports (applicable for applications with p_2 > 210 bar)

Knowledge is POWER – Motion Force Control is our Business
HYQUIP Limited New Brunswick Street Horwich Bolton Lancashire BL6 7JB UK

HYQUIP
+44 (0)1204 699959
enquiries@hyquip.co.uk
hyquip.co.uk

Parallel keyed shaft SAE J744 22-1 with 2-bolt flange SAE J744 101-2 (B) spigot dia. 101.6 mm

AZPG–22– ... **QC12**MB - S0662

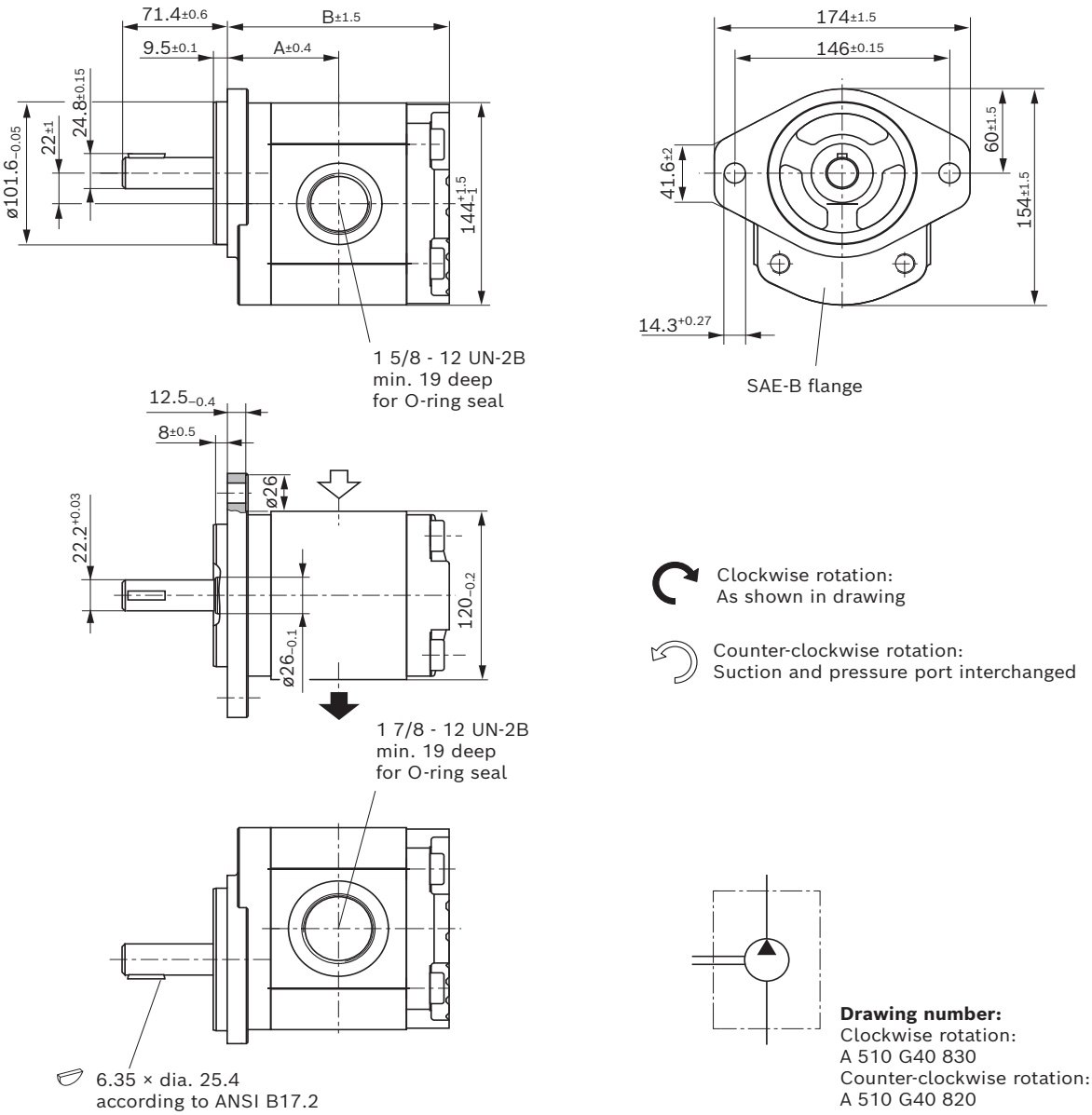

NG	Material number Direction of rotation counter-clockwise	clockwise	Maximum intermittent pressure[1] p_2 bar	Maximum speed n_{max} rpm	Dimensions A mm	B mm
50	9510490139	9510490129	220	2600	77.7	153.0
56	9510490140	9510490130	195	2300	80.2	157.9
63	9510490141	9510490131	170	2300	83.1	163.8

1) Limited service life with threaded ports (applicable for applications with p_2 > 210 bar)

Knowledge is POWER – Motion Force Control is our Business
HYQUIP Limited New Brunswick Street Horwich Bolton Lancashire BL6 7JB UK

HYQUIP
+44 (0)1204 699959
enquiries@hyquip.co.uk
hyquip.co.uk

Parallel keyed shaft SAE J744 22-1 with 2-bolt flange SAE J744 101-2 (B) spigot dia. 101.6 mm

AZPG–22– ... **QC12**MA

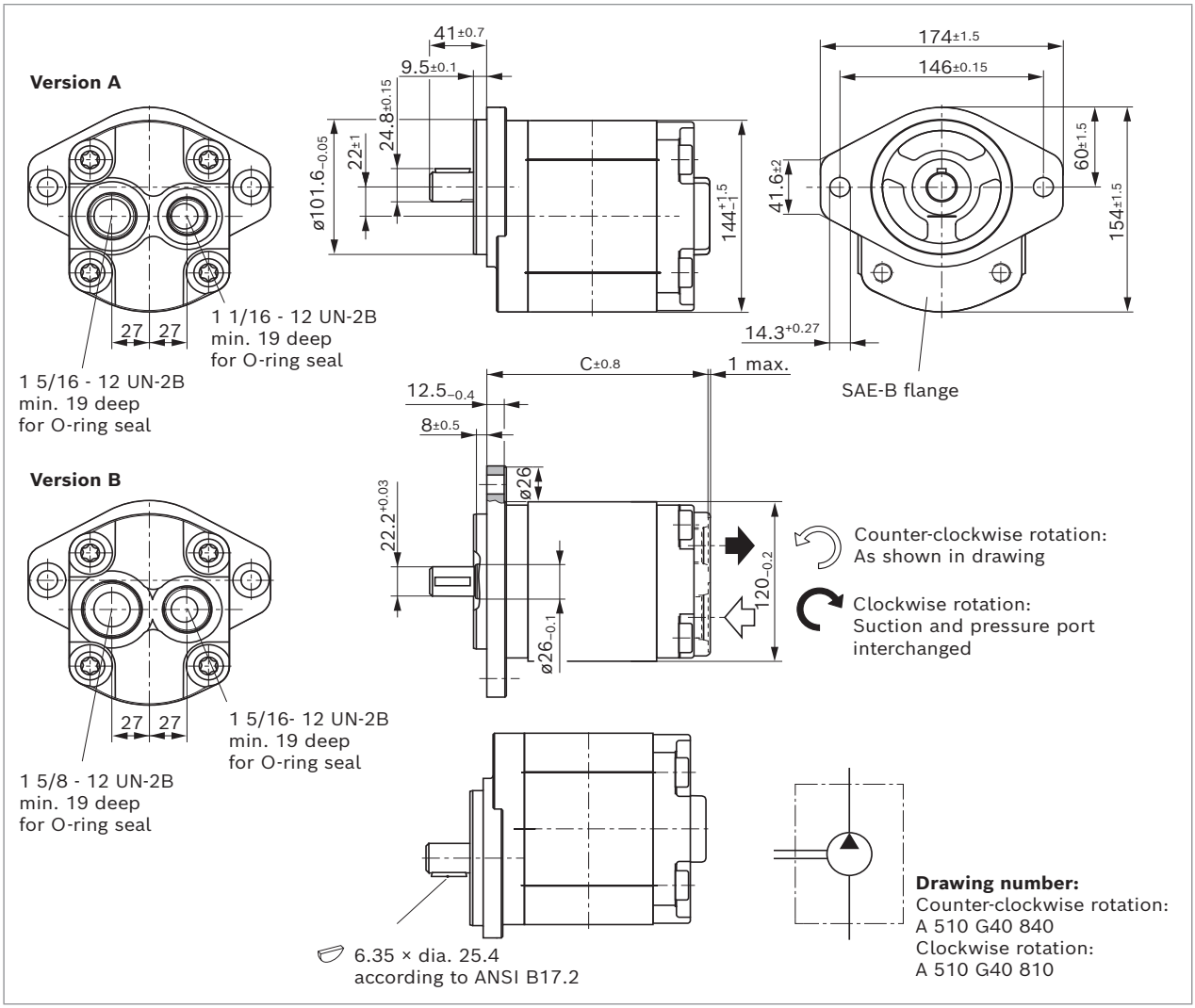

NG	Material number Direction of rotation counter-clockwise	 clockwise	Maximum intermittent pressure p_2 bar	Maximum speed n_{max} rpm	Dimensions C mm	Version
22	9510490111	9510490101	250	3000	141.2	A
25	9510490112	9510490102	250	3000	143.2	A
28	9510490113	9510490103	250	3000	145.7	A
32	9510490114	9510490104	250	2800	149.0	B
36	9510490115	9510490105	250	2800	152.4	B
40	9510490116	9510490106	250	2800	155.7	B
45	9510490117	9510490107	250	2600	159.7	B
50	9510490118	9510490108	220	2600	163.9	B
56	9510490119	9510490109	195	2300	169.8	B
63	9510490120	9510490110	170	2300	174.7	B

Knowledge is POWER – Motion Force Control is our Business
HYQUIP Limited New Brunswick Street Horwich Bolton Lancashire BL6 7JB UK

HYQUIP
+44 (0)1204 699959
enquiries@hyquip.co.uk
hyquip.co.uk

Parallel keyed shaft SAE J744 22-1 with 2-bolt flange SAE J744 101-2 (B) spigot dia. 101.6 mm

AZPG–22– ... **QC15**MB

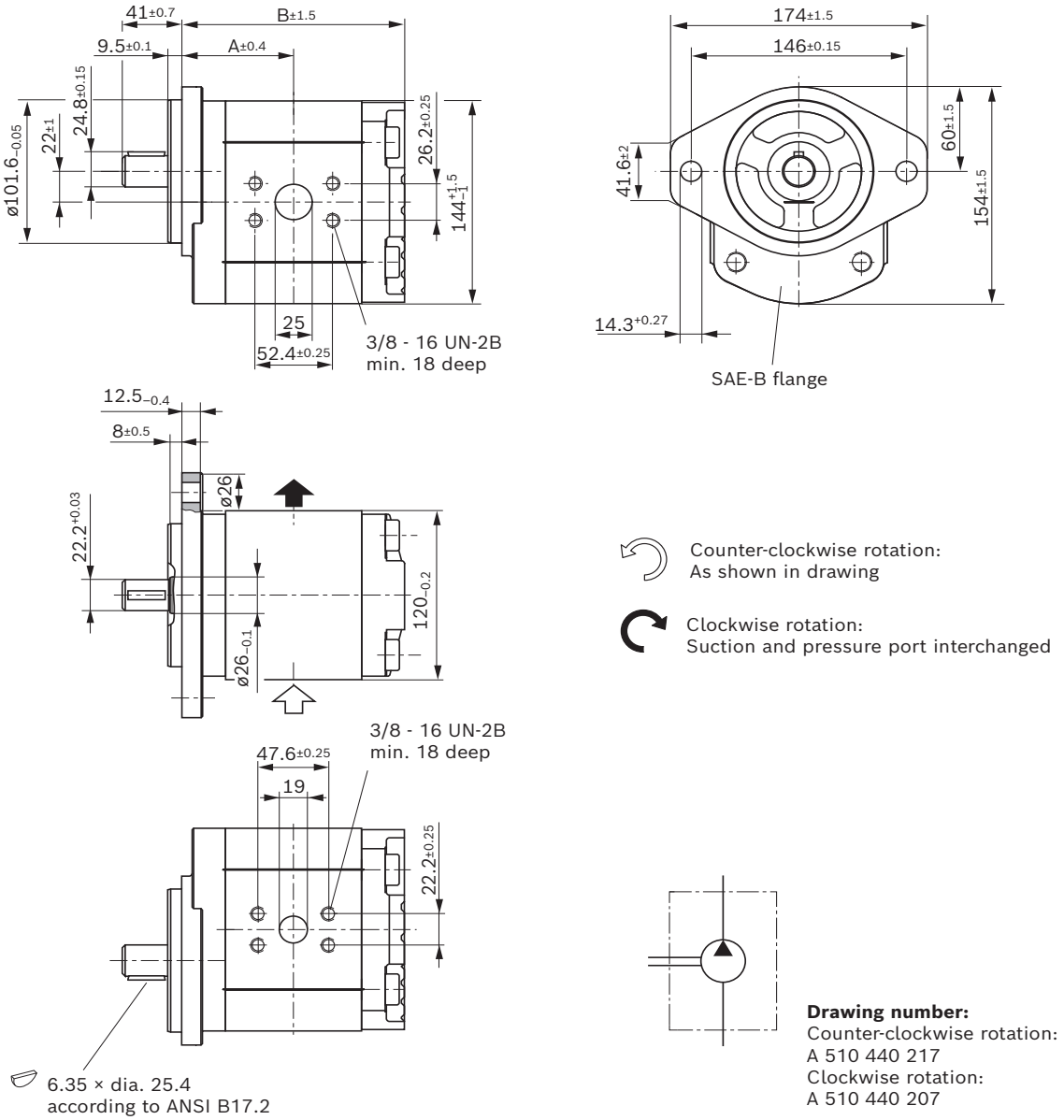

NG	Material number Direction of rotation counter-clockwise	clockwise	Maximum intermittent pressure p_2 bar	Maximum speed n_{max} rpm	Dimensions A mm	B mm
22	9510490091	9510490081	250	3000	66.4	130.3
25	9510490092	9510490082	250	3000	67.4	132.3
28	9510490093	9510490083	250	3000	68.7	134.8
32	9510490094	9510490084	250	2800	70.3	138.1
36	9510490095	9510490085	250	2800	71.9	141.5

Knowledge is POWER – Motion Force Control is our Business
HYQUIP Limited New Brunswick Street Horwich Bolton Lancashire BL6 7JB UK

Parallel keyed shaft SAE J744 22-1 with 2-bolt flange SAE J744 101-2 (B) spigot dia. 101.6 mm
AZPG–22– ... **QC15**MB

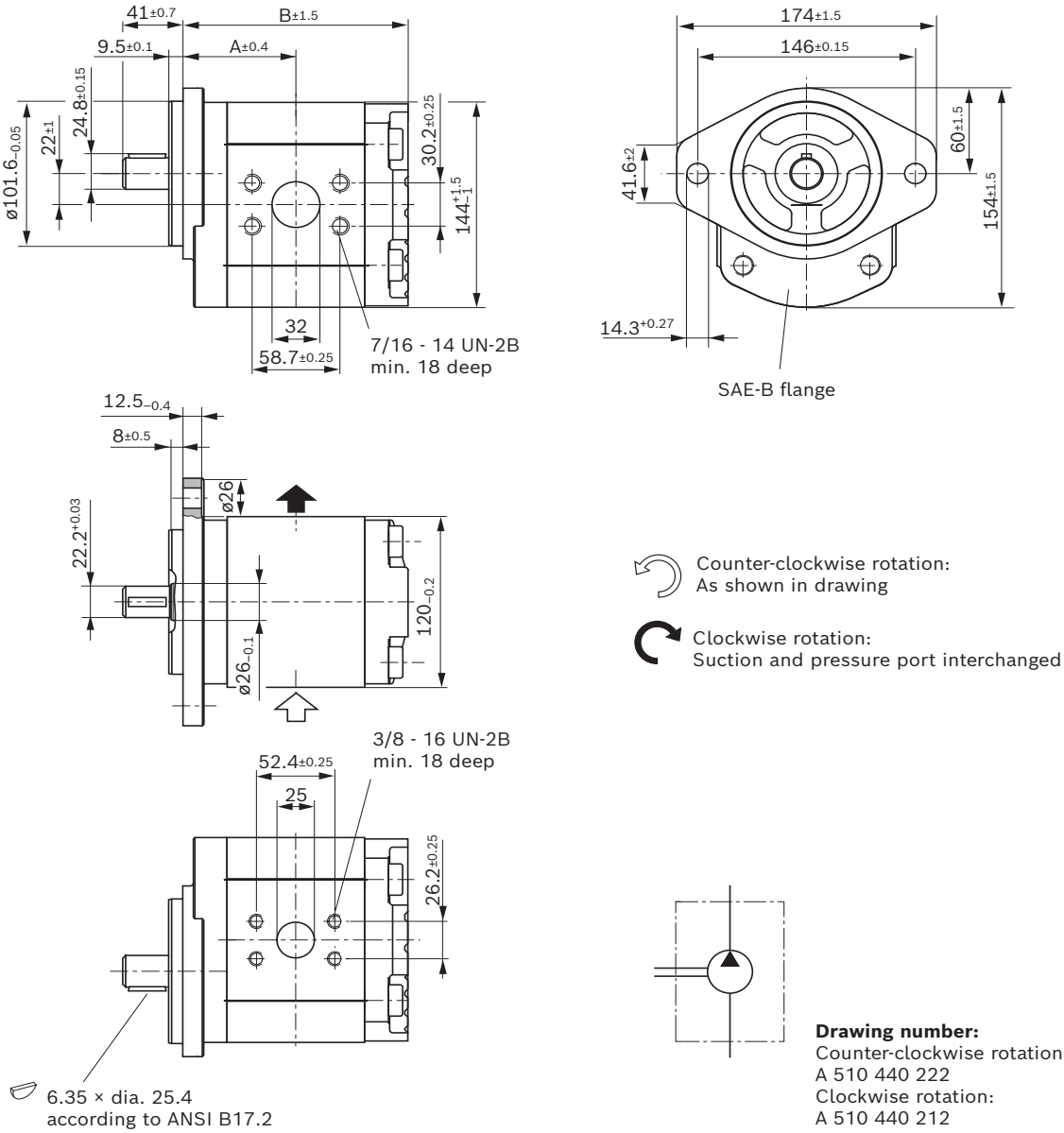

NG	Material number Direction of rotation counter-clockwise	 clockwise	Maximum intermittent pressure p_2 bar	Maximum speed n_{max} rpm	Dimensions A mm	 B mm
40	9510490096	9510490086	250	2800	73.6	144.8
45	9510490097	9510490087	250	2600	75.6	148.8
50	9510490098	9510490088	220	2600	77.7	153.0

Parallel keyed shaft SAE J744 22-1 with 2-bolt flange SAE J744 101-2 (B) spigot dia. 101.6 mm
AZPG–22– ... **QC15**MB

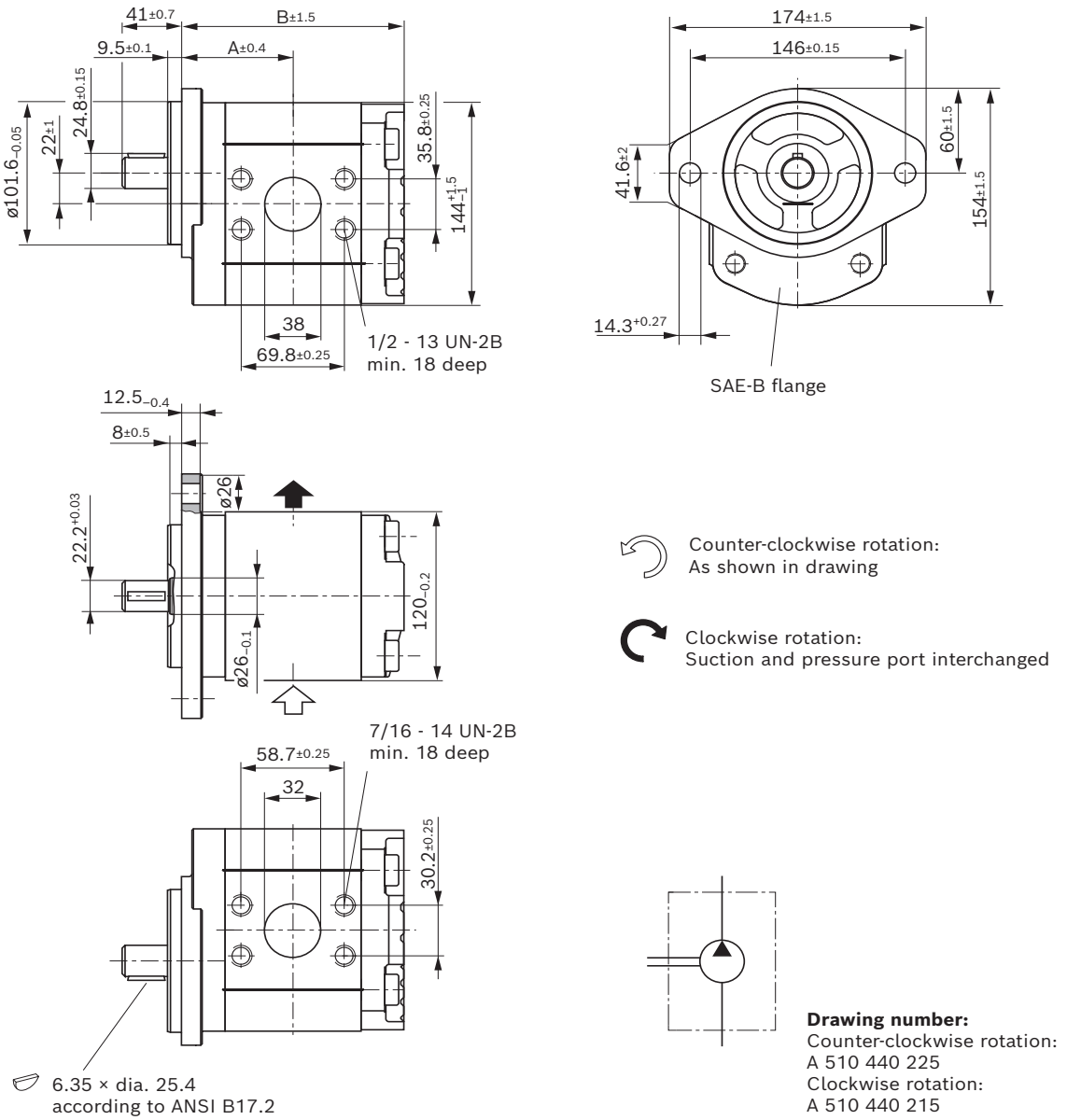

NG	Material number Direction of rotation counter-clockwise	clockwise	Maximum intermittent pressure p_2 bar	Maximum speed n_{max} rpm	Dimensions A mm	B mm
56	9510490099	9510490089	195	2300	80.2	157.9
63	9510490100	9510490090	170	2300	83.1	163.8

HYQUIP
+44 (0)1204 699959
enquiries@hyquip.co.uk
hyquip.co.uk

Splined shaft SAE J744 25-4 15T with 2-bolt flange SAE J744 101-2 (B) spigot dia. 101.6 mm
AZPG–22– ... **EC07**KB

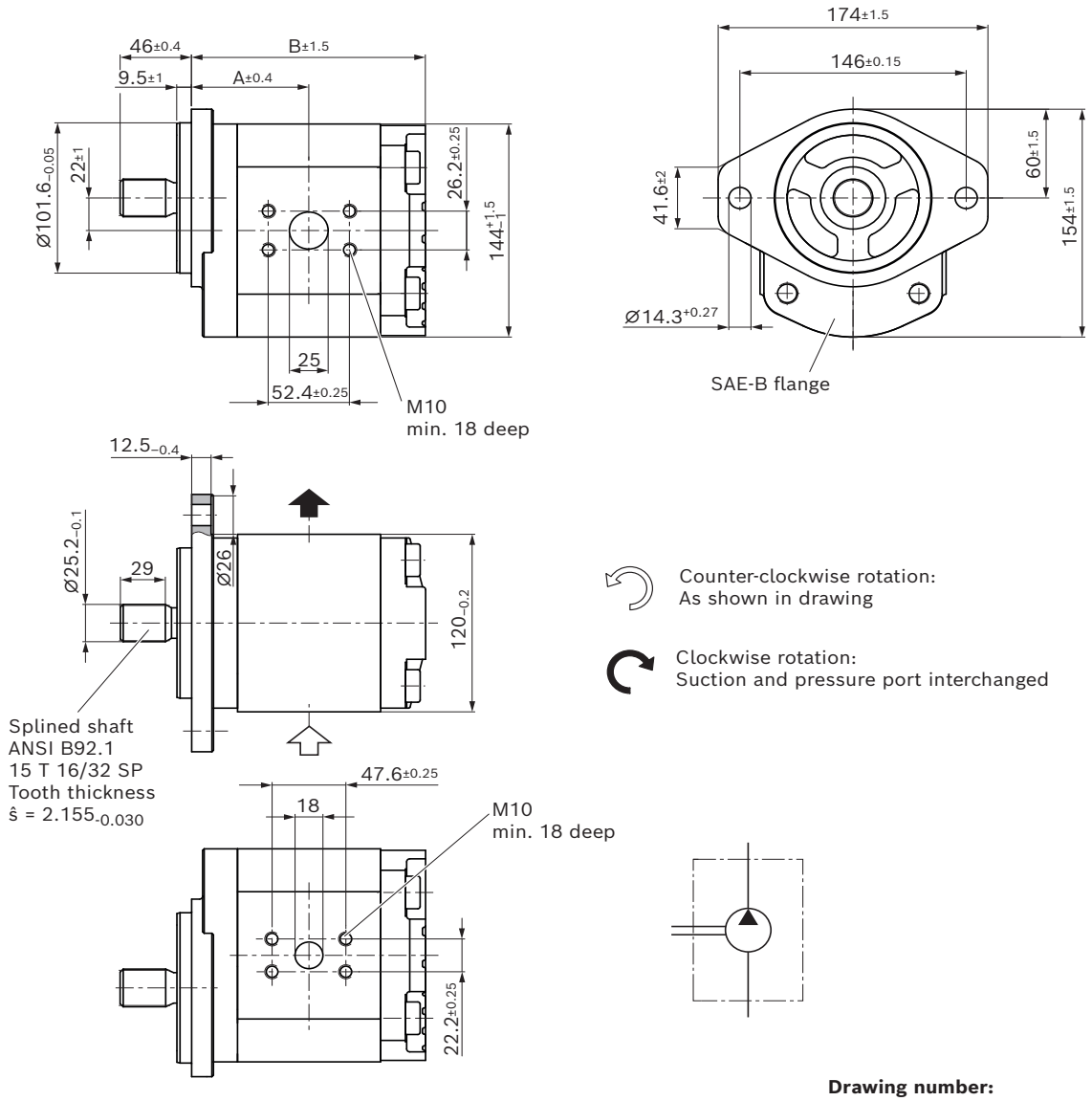

Drawing number:
RA63711002

NG	Material number Direction of rotation counter-clockwise	clockwise	Maximum intermittent pressure p_2 bar	Maximum speed n_{max} rpm	Dimensions A mm	B mm
28	0510725500		280	2600	68.7	134.8

Knowledge is POWER – Motion Force Control is our Business
HYQUIP Limited New Brunswick Street Horwich Bolton Lancashire BL6 7JB UK

Parallel keyed shaft (ISO dia. 25 mm) with special version of the front cover

AZPG–22– ... **AX07**KB - S0303

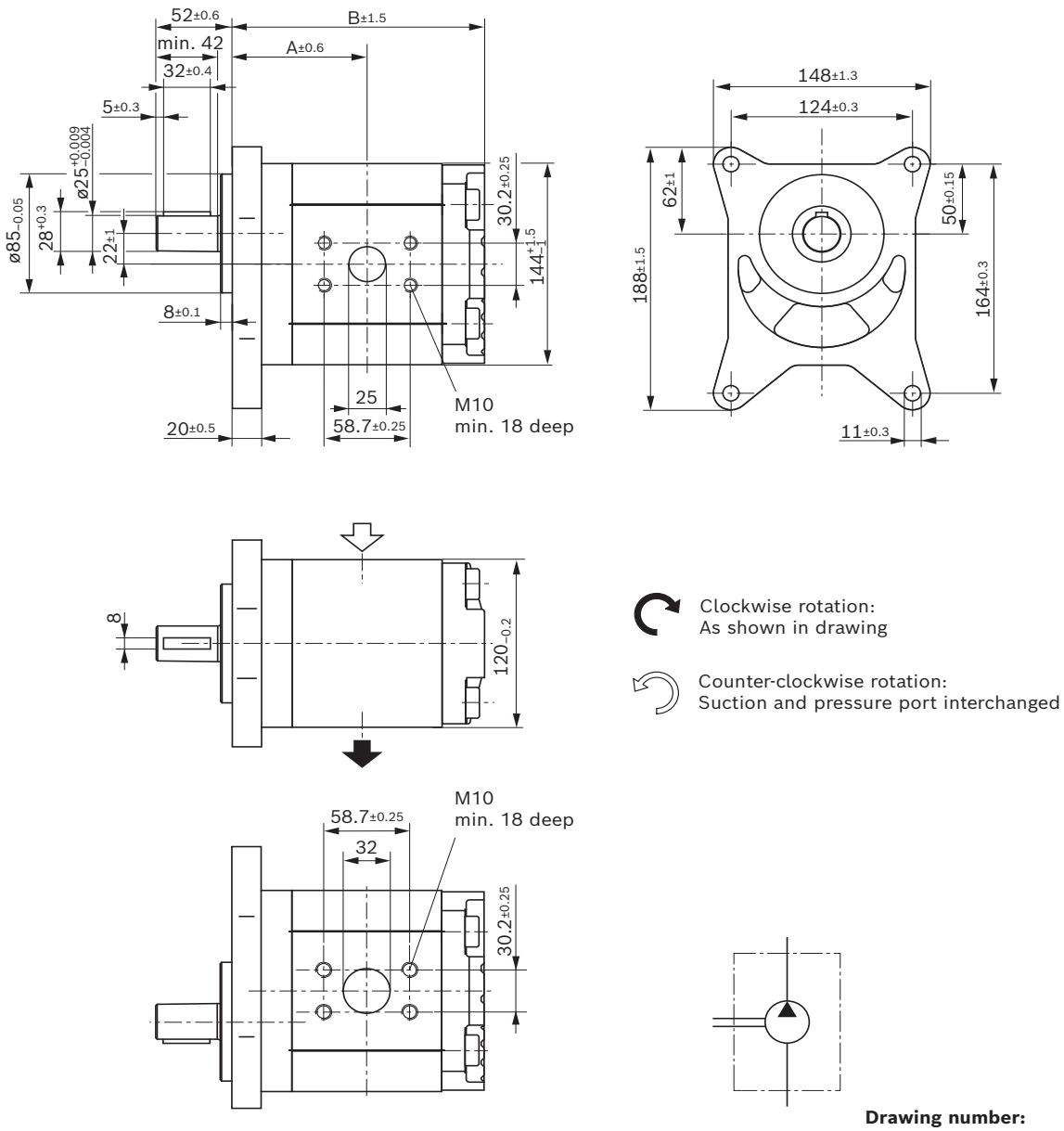

Drawing number:
A 510 441 297

NG	Material number Direction of rotation counter-clockwise	clockwise	Maximum intermittent pressure p_2 bar	Maximum speed n_{max} rpm	Dimensions A mm	B mm
40	0510725432	0510725147	280	2800	85.1	157.7
50	0510825314	0510825015	250	2600	89.2	165.9

Parallel keyed shaft (ISO dia. 25 mm) with special version of the front cover

AZPG–22– ... **AX07**KB - S0303

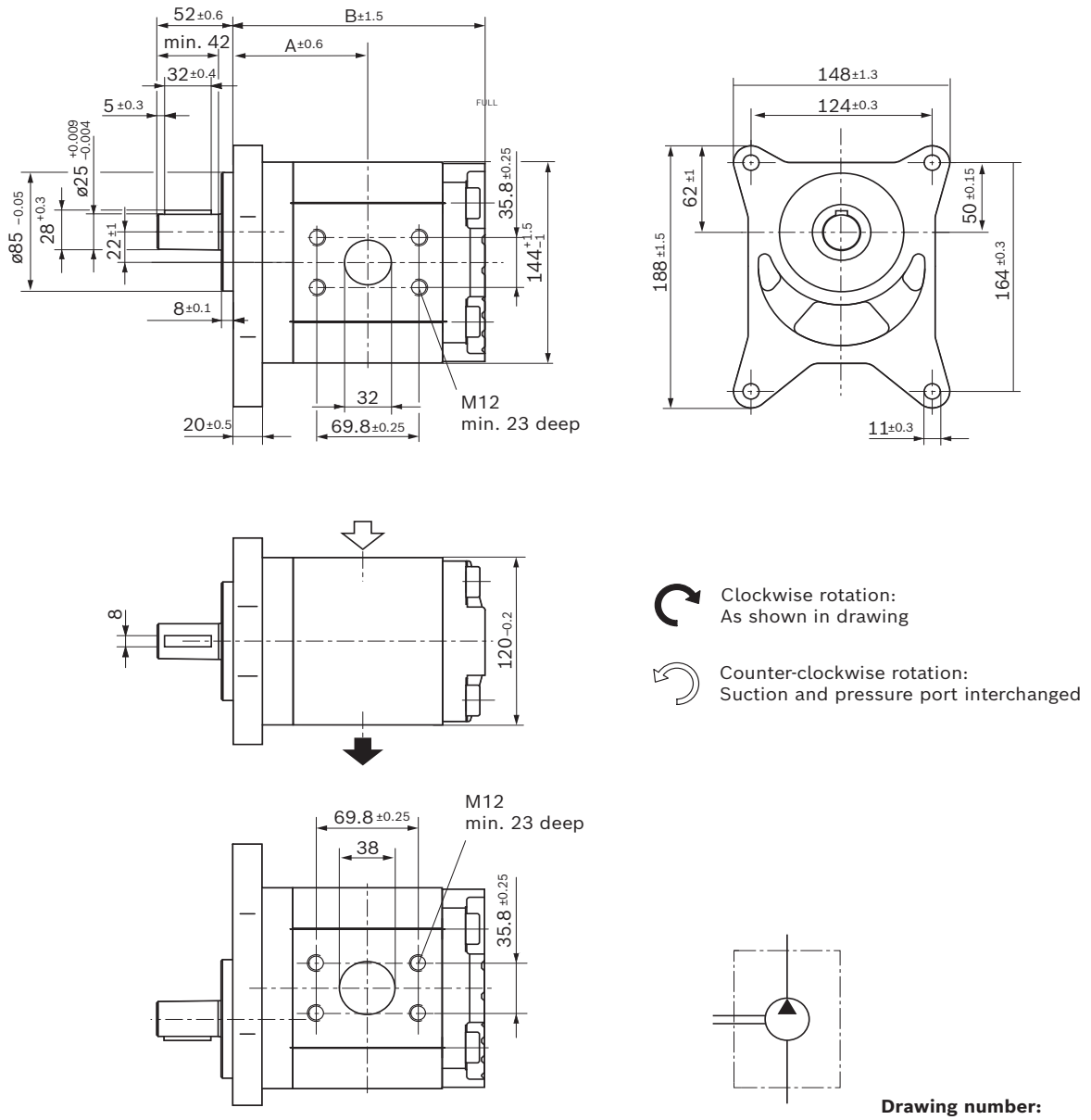

Drawing number:
A 510 441 297

NG	Material number Direction of rotation counter-clockwise	 clockwise	Maximum intermittent pressure p_2 bar	Maximum speed n_{max} rpm	Dimensions A mm	 B mm
63	0510825315	0510825016	200	2300	94.6	176.7
70	0510825316	0510825017	150	2200	97.5	182.5

Parallel keyed shaft (ISO dia. 25 mm) with special version of the front cover

AZPG–22– ... **AX07**KB - S0303

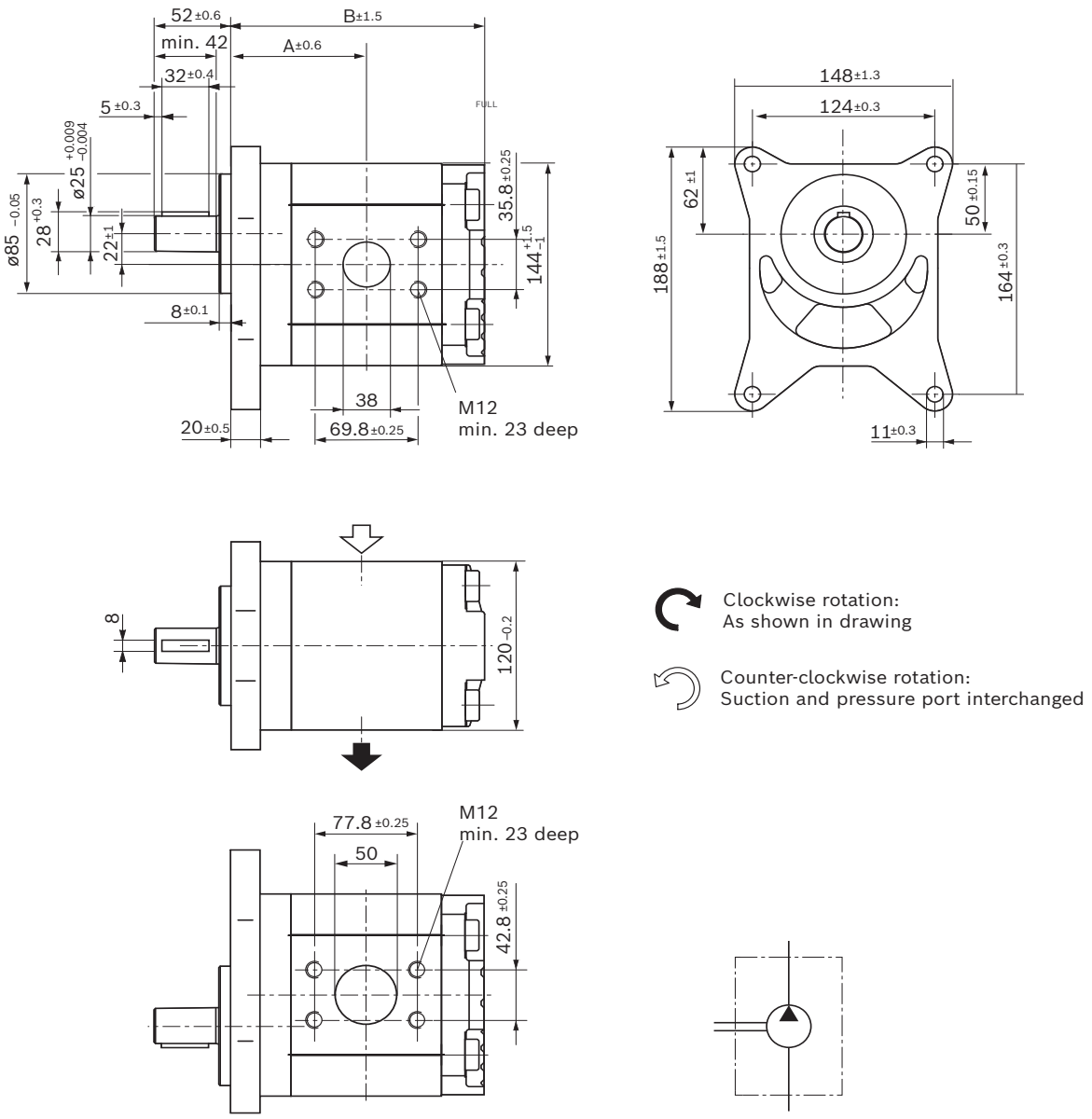

Drawing number:
A 510 441 297

NG	Material number Direction of rotation counter-clockwise	clockwise	Maximum intermittent pressure p_2 bar	Maximum speed n_{max} rpm	Dimensions A mm	B mm
80	0510825317	0510825018	120	2200	100.6	190.7
100	0510825318	0510825019	100	1700	109.8	207.2

HYQUIP
+44 (0)1204 699959
enquiries@hyquip.co.uk
hyquip.co.uk

Tapered keyed shaft 1:5 with rectangular flange spigot dia. 105 mm
AZPGG–22– ... **CB2020**MB

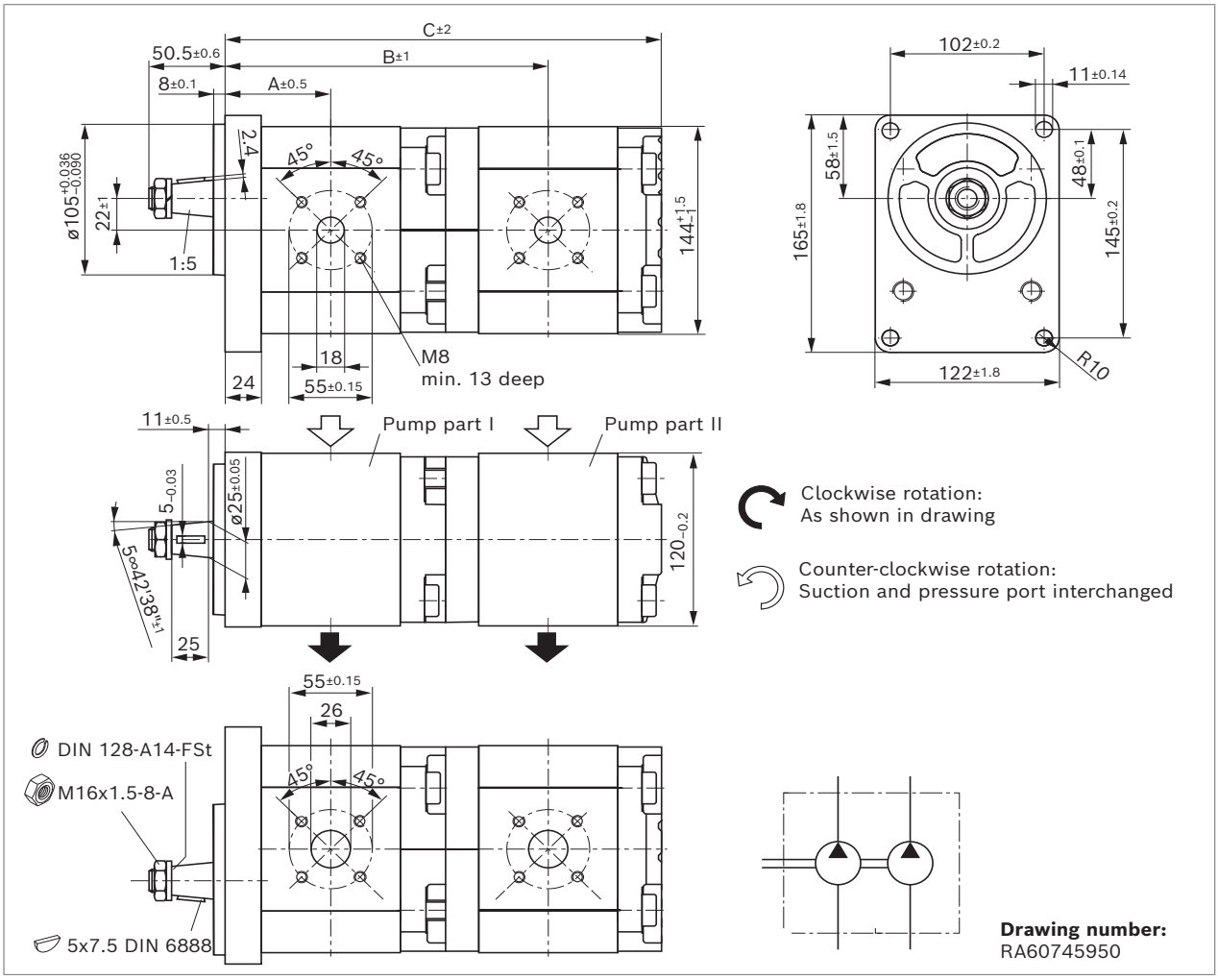

NG		Material number Direction of rotation		Maximum intermittent pressure p_2 bar		Maximum speed n_{max} rpm	Dimensions A mm	B mm	C mm
P I	P II	counter-clockwise	clockwise	P I	P II				
22	22	0510765430	0510765115	280	280	3000	60.9	186.4	250.4
32	22	0510767337	0510767079	280	280	2800	64.8	194.2	258.2
32	32	0510767336	0510767078	280	230	2800	64.8	198.1	266.0
40	22	0510768332	0510768051	260	280	2800	68.1	200.9	264.8
40	32	0510768331	0510768050	230	230	2800	68.1	204.8	272.6
40	40	0510768330	0510768049	230	180	2800	68.1	208.1	279.3
45	22		0510769033	230	280	2600	70.1	204.9	268.9
45	32		0510769032	200	230	2600	70.1	208.9	276.3
45	40		0510769031	200	180	2600	70.1	212.2	283.3
45	45	0510769325	0510769030	200	160	2600	70.1	214.2	287.4
56	40		0510865013	170	180	2300	74.7	221.3	292.4

Knowledge is POWER – Motion Force Control is our Business
HYQUIP Limited New Brunswick Street Horwich Bolton Lancashire BL6 7JB UK

HYQUIP
+44 (0)1204 699959
enquiries@hyquip.co.uk
hyquip.co.uk

Splined shaft SAE J744 22-4 13T with 2-bolt flange SAE J744 101-2 (B) spigot dia. 101.6 mm

AZPGG–22– ... **DC0707**MB

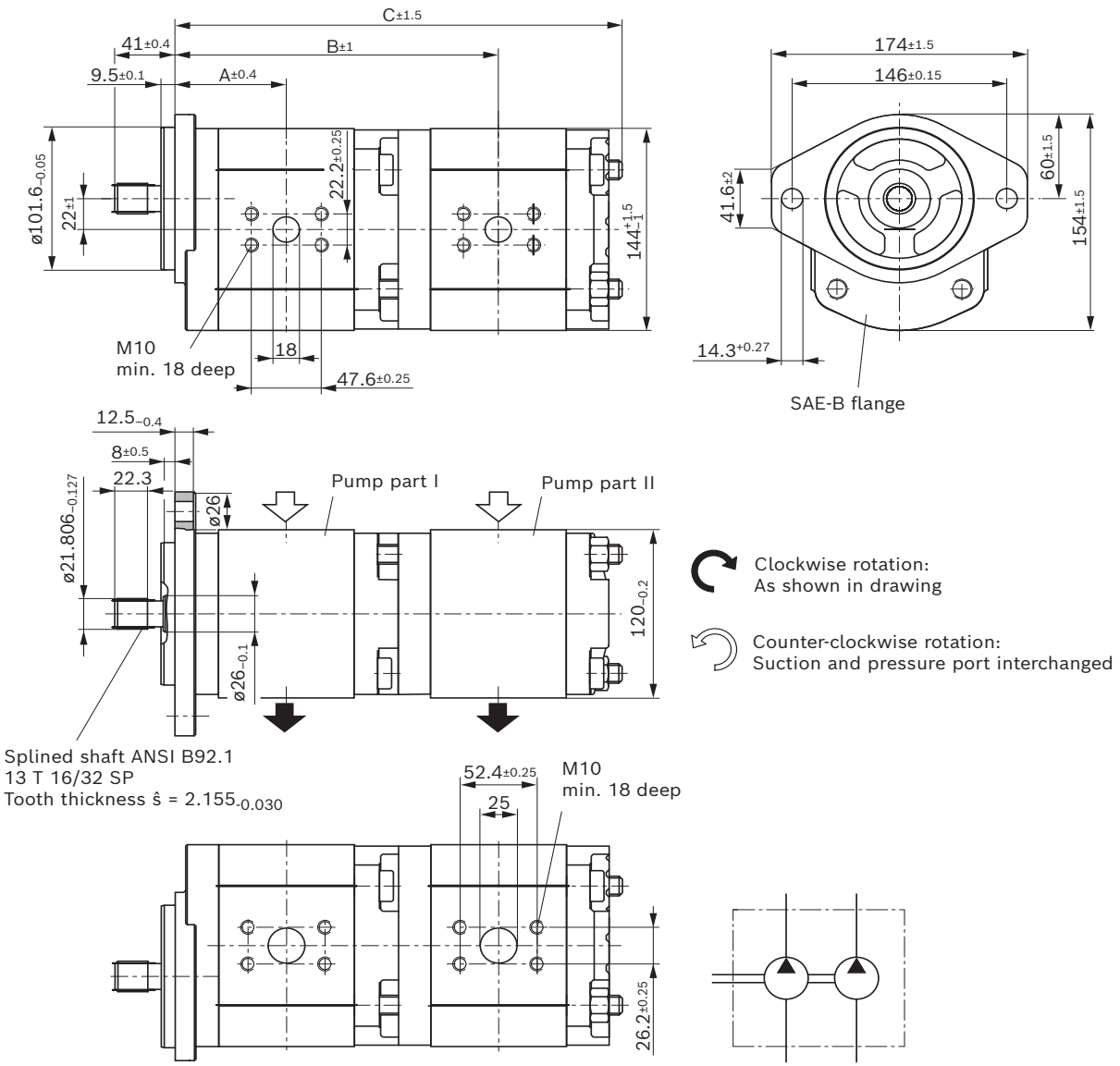

Drawing number:
RA56963845

NG		Material number Direction of rotation		Maximum intermittent pressure p_2 bar		Maximum speed n_{max} rpm	Dimensions A mm	B mm	C mm
P I	P II	counter-clockwise	clockwise	P I	P II				
28	28		0510766016	260	260	2500	68.7	198.7	269.2

Knowledge is POWER – Motion Force Control is our Business
HYQUIP Limited New Brunswick Street Horwich Bolton Lancashire BL6 7JB UK

HYQUIP
+44 (0)1204 699959
enquiries@hyquip.co.uk
hyquip.co.uk

Splined shaft SAE J744 22-4 13T with 2-bolt flange SAE J744 101-2 (B) spigot dia. 101.6 mm

AZPGF–22– ... **DC2020**MB

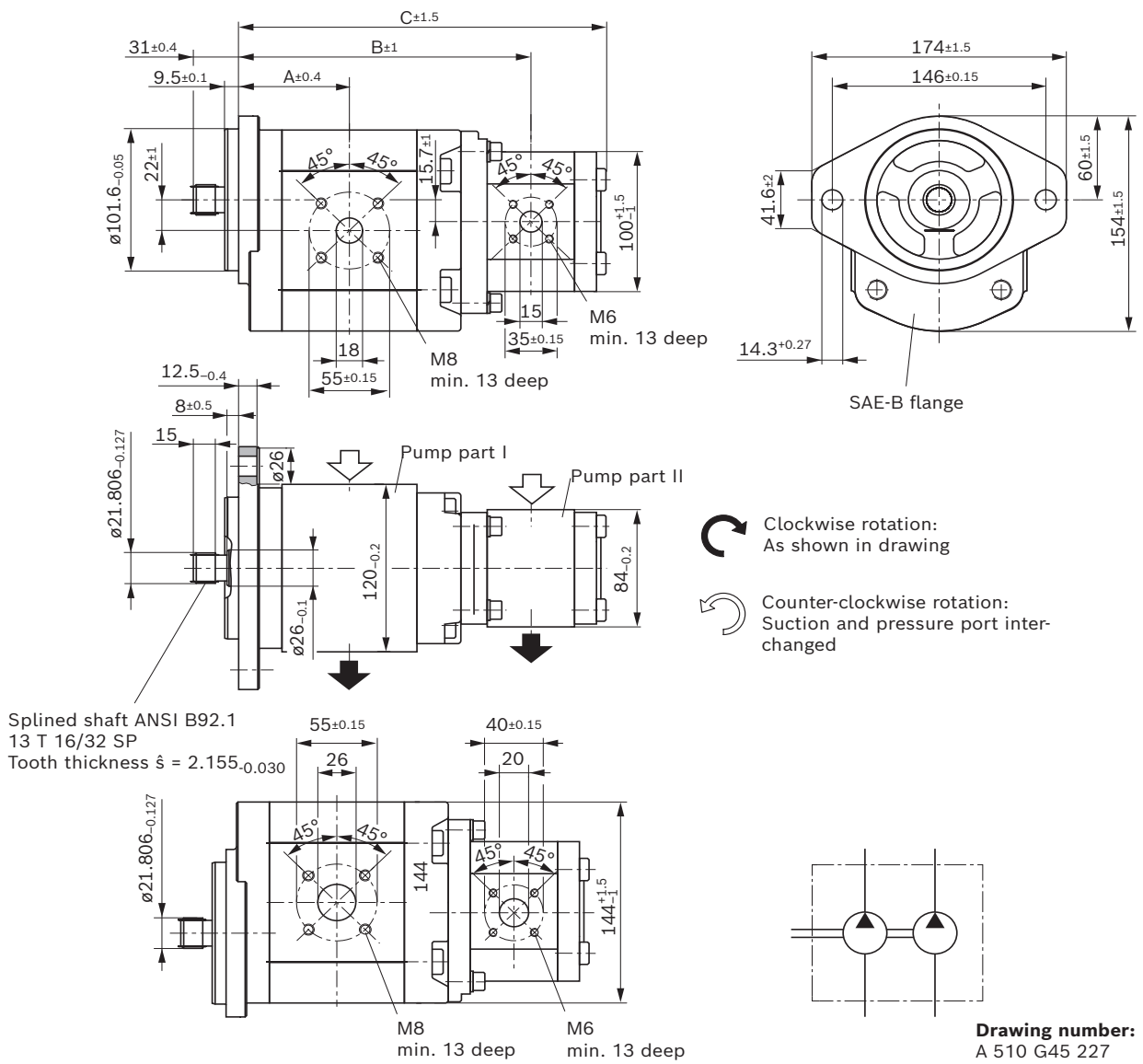

NG		Material number Direction of rotation		Maximum intermittent pressure p_2 bar		Maximum speed n_{max} rpm	Dimensions A mm	B mm	C mm
P I	P II	counter-clockwise	clockwise	P I	P II				
22	16		0510765118	250	230	3000	66.4	181.2	236.2
32	16			250	230	2800	70.3	189.0	244.0
56	16	0510665320	0510767067	200	230	2300	80.2	208.8	263.8
56	16	0510665319		200	190	2300	80.2	208.8	268.8
56	22		0510865016	200	190	2300	80.2	216.4	274.2

Knowledge is POWER – Motion Force Control is our Business
HYQUIP Limited New Brunswick Street Horwich Bolton Lancashire BL6 7JB UK

Splined shaft SAE J744 22-4 13T with 2-bolt flange SAE J744 101-2 (B) spigot dia. 101.6 mm

AZPGF–22– ... **DC2020**MB (... KB)

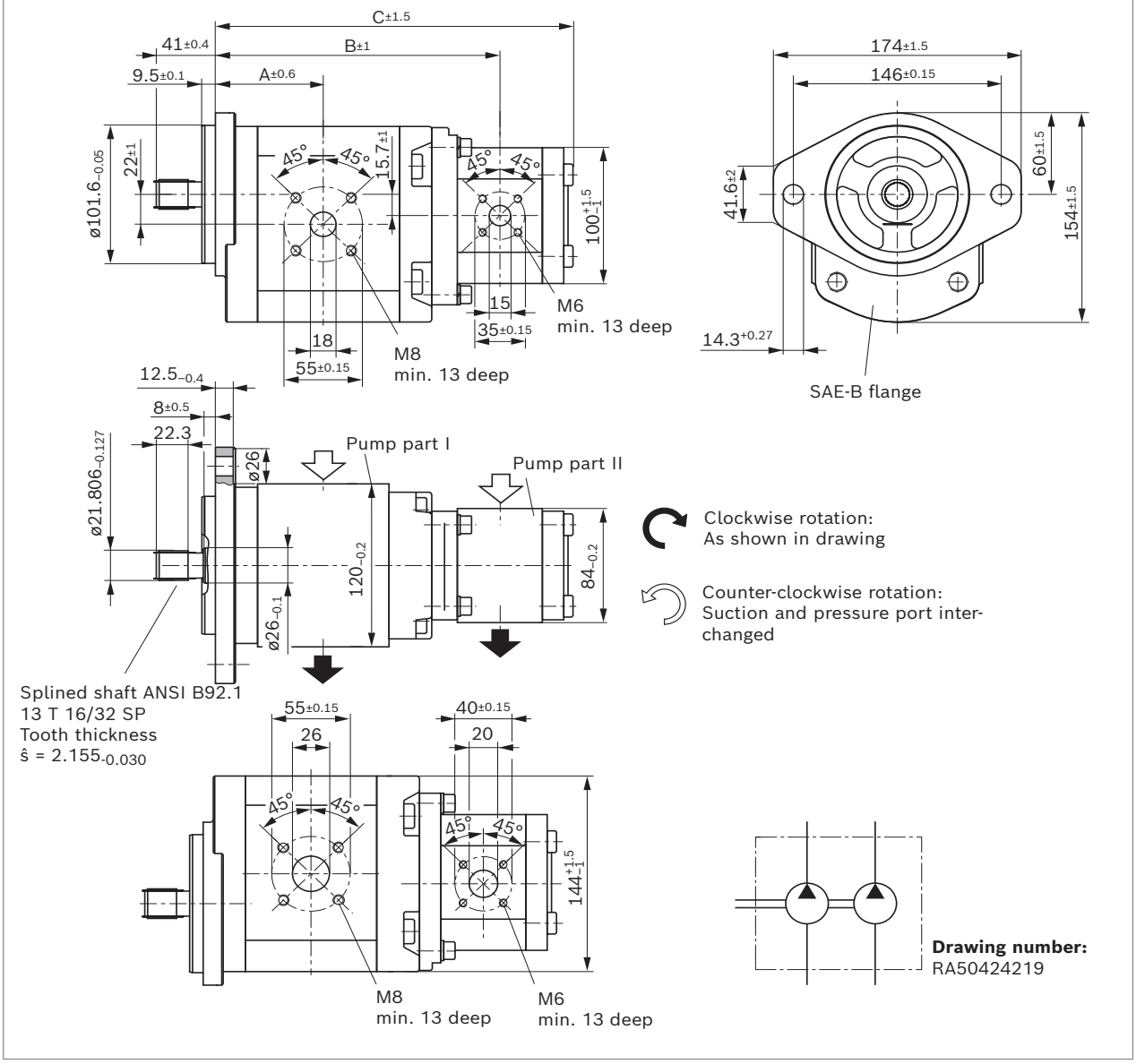

NG		Material number Direction of rotation		Maximum intermittent pressure p_2 bar		Maximum speed n_{max} rpm	Dimensions A mm	B mm	C mm
P I	P II	counter-clockwise	clockwise	P I	P II				
32	11	0510767324[1)]		280	280	1700	70.3	188.5	235.6
32	14		0510767066	280	260	2800	70.3	189.0	240.6
32	16	0510767330		280	230	2800	70.3	189.0	244.0
32	16	0510767328[1)]	0510767064[1)]	280	230	2800	70.3	189.0	244.0
40	14		0510768043	280	260	2800	73.6	195.6	247.3
45	11	0510769318[1)]		250	280	1700	75.6	199.2	246.4
45	16	0510769319[1)]		250	230	1700	75.6	199.7	254.8
45	16		0510769022	280	230	2600	75.6	199.7	254.8
45	19	0510769321	0510769023	280	190	2600	75.6	199.7	259.8

1) Version with shaft seal in FKM (type code: ...KB)

Knowledge is POWER – Motion Force Control is our Business
HYQUIP Limited New Brunswick Street Horwich Bolton Lancashire BL6 7JB UK

Project planning information

Technical data
All mentioned technical data are dependent on manufacturing tolerances and are applicable for certain boundary conditions.
Note that certain deviations are therefore possible and that technical data may vary when certain boundary conditions (e.g., viscosity) change.
Pumps delivered by Bosch Rexroth are tested for function and performance.
The pump may only be operated with the permissible data (see chapter “Technical data”).

Characteristic curves
When dimensioning the gear pump, observe the maximum possible application data on the basis of the characteristic curves shown.

Application information
External gear units are not approved in on-highway vehicles for safety-relevant functions, as well as functions in the drive train, for steering, braking and level regulation. Classified as on-highway vehicles are e.g. vehicles such as motorbikes, private cars, trucks, vans, freight cars, buses and trailers. The European vehicle classes L (motorbikes), M (private cars), N (vehicles for transporting goods such as trucks and vans) and O (trailers and semi-trailers) serve as reference.

Notice
When used as an auxiliary steering pump, the vehicle manufacturer should make sure that the steering system continues to operate safely, even if the auxiliary steering pump fails (regulation similar to ECE R-79 can be referred).

Filtration of the hydraulic fluid
Since the majority of premature failures in gear pumps occur due to contaminated hydraulic fluid, filtration should maintain a cleanliness level of 20/18/15 as defined by ISO 4406. Thus contamination can be reduced to an acceptable degree in terms of particle size and concentration.
Bosch Rexroth generally recommends full-flow filtration.
The basic contamination of the hydraulic fluid filled in should not exceed class 20/18/15 as defined by ISO 4406.
New fluids are often above this value. In such instances, a filling device with a special filter should be used.
Bosch Rexroth is not liable for wear due to contamination.
For hydraulic systems or devices with function-related, critical failure effects, such as steering and brake valves, the type of filtration selected must be adapted to the sensitivity of these devices.

Further information
Installation drawings and dimensions are valid at date of publication, subject to modifications.
Further information and notes on project planning can be found in the “General Operating Instructions for External Gear Units” (07012-B, chapter 5.5).

Knowledge is POWER – Motion Force Control is our Business
HYQUIP Limited New Brunswick Street Horwich Bolton Lancashire BL6 7JB UK

Information

AZ configurator

With our practical product selector, it will take you next to no time to find the right solution for your applications, no matter whether it is SILENCE PLUS or another external gear unit.
The selector guides you through a selection of features to all of the products available for order. By clicking on the order number, you can view and download the following product information: Data sheet, dimension sheet, operating conditions, and tightening torques.
You can order your selection directly via our online shop and at the same time benefit from an additional discount of 2%. And if you need something really quickly, simply use our fast delivery and preferred programs (GoTo). Then the goods will be sent within 10 working days.
You also have the possibility to easily and conveniently configure your individual external gear unit with our AZ configurator. All the necessary data that you need for the project planning of external gear units is requested by means of the menu navigation.
For an already existing configuration you receive as a result the order number, the type code, as well as further information. If your configuration does not lead to a product that is available for order, our online tools provide you with the possibility of sending a project request directly to Bosch Rexroth. We will then get in contact with you.

Link: www.boschrexroth.com/az-configurator

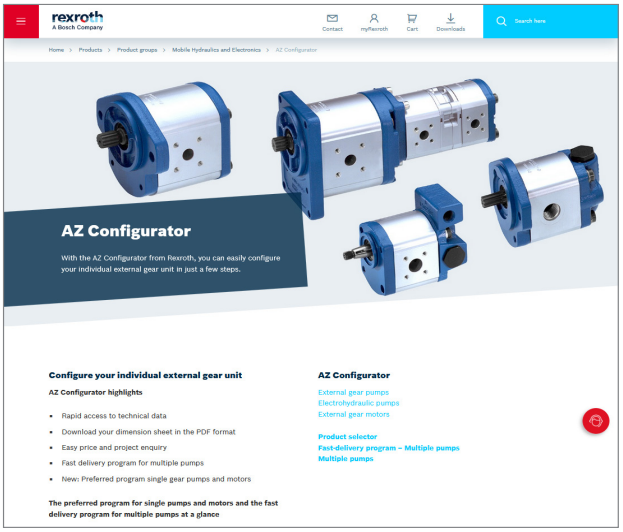

Spare parts

Spare parts can be found online at
www.boschrexroth.com/spc
Select “Spare parts and accessories” and enter the material number of the external gear units into the search field.

Example:
Material number: **0 510 825 325**
Type designation:: AZPG-22-056LCB20MB

All available spare parts are listed under “Spare parts”and can be ordered via the shopping basket.

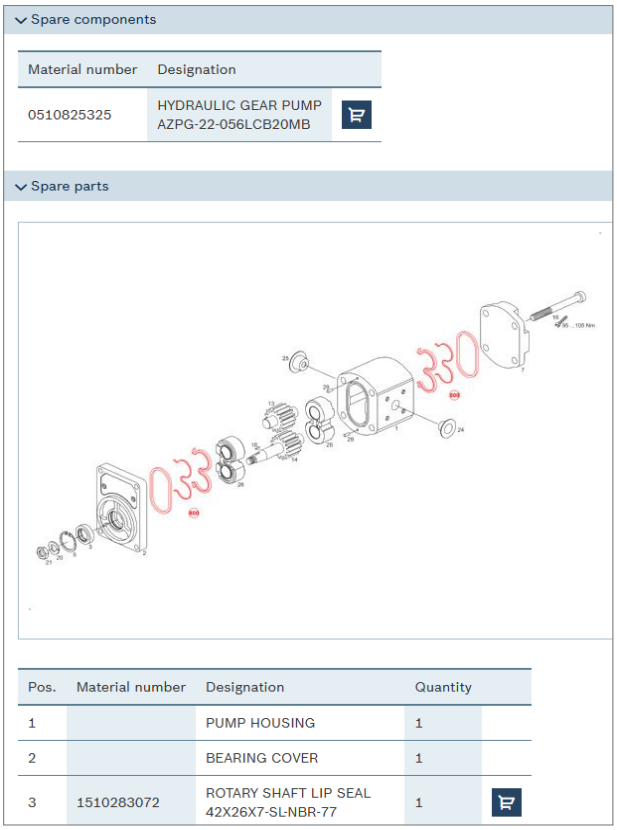

Spare components

Material number	Designation
0510825325	HYDRAULIC GEAR PUMP AZPG-22-056LCB20MB

Spare parts

Pos.	Material number	Designation	Quantity
1		PUMP HOUSING	1
2		BEARING COVER	1
3	1510283072	ROTARY SHAFT LIP SEAL 42X26X7-SL-NBR-77	1

Further information

Extensive notes and suggestions can be found in the Hydraulic Trainer, volume 3: “Planning and Design of Hydraulic Power Systems”, order number R900018547.

RE 10093/2023-03-16, Bosch Rexroth AG.

HYQUIP
+44 (0)1204 699959
enquiries@hyquip.co.uk
hyquip.co.uk

Accessories

90° angle flange, for square flange (German version) 20

Complete screw connections with O-ring, metric screw set, nuts and olive.

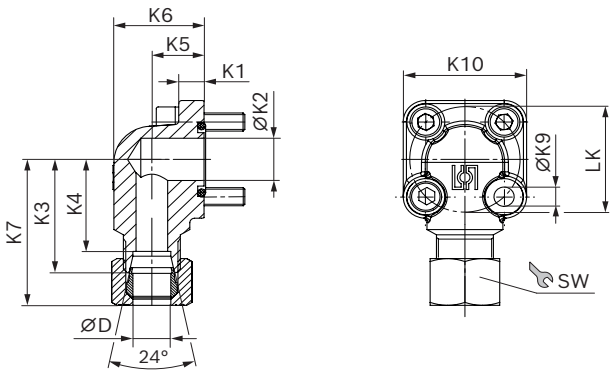

LK	D	Series[1]	Material number	p_{max}	K1	K2	K3	K4	K5	K6	K7	K9	K10	SW	Screws		O-ring	Weight
mm	mm			bar	mm	mm	mm	mm	mm	mm	mm	mm	mm	mm	2 ×	2 ×	NBR	kg
55	20	S	1 515 702 004	250	13	18.2	45	34.5	24	38	57	8.4	58	36	M8 × 25	M8 × 50	32 × 2.5	0.62
55	30	S	1 545 719 006	250	12	26.5	49	38.5	32	51	63.5	8.4	58	50	M8 × 25	M8 × 50	32 × 2.5	0.63
55	35	L	1 515 702 005	100	12	26.5	49	38.5	32	52	61	8.4	58	50	M8 × 25	M8 × 60	32 × 2.5	0.77
55	42	L	1 515 702 019	100	12	26.5	49	38	40	64	61.5	8.4	58	60	M8 × 25	M8 × 70	32 × 2.5	1.04

Notice
Permissible tightening torques can be found in the "General instruction manual for external gear units": www.boschrexroth.com/07012-B

1) See DIN EN ISO 8434-1

Bosch Rexroth AG
Robert-Bosch-Straße 2
71701 Schwieberdingen
Germany
brm-az.info@boschrexroth.de
www.boschrexroth.com

© Bosch Rexroth AG 1998. All rights reserved, also regarding any disposal, exploitation, reproduction, editing, distribution, as well as in the event of applications for industrial property rights. The data specified within only serves to describe the product. No statements concerning a certain condition or suitability for a certain application can be derived from our information. The information given does not release the user from the obligation of own judgment and verification. It must be remembered that our products are subject to a natural process of wear and aging.

Bosch Rexroth AG, RE 10093/2023-03-16

Knowledge is POWER – Motion Force Control is our Business
HYQUIP Limited New Brunswick Street Horwich Bolton Lancashire BL6 7JB UK